euro-block

CATALOGO GENERALE
2020-2021

GENERAL CATALOGUE 2020-2021
GESAMTKATALOG 2020-2021

Edizione/edition/ausgabe: 2020-1

INDICE

PRESENTAZIONE / INTRODUCTION

Chi Siamo / Who we are 1

Caratteristiche principali / Main features 2

Normative / Standards 3

Su richiesta / On request 4

La nostra linea supporti / Supports 4

CATEGORIE PRODOTTI / PRODUCT CATEGORIES

Morsettiere monopiano / Single deck terminal blocks 5

Morsettiere a molla / Spring terminal blocks 23

Morsettiere pluripiano / Multi deck terminal blocks 31

Connettori / Connectors 37

Accessori / Accessories 81

Connettori potenza / Power connectors 83

Connettori con gancio barra din / Din rail hook connectors 91

Connettori polarizzati / Polarized connectors 97

Supporti per c.s. da guida din / Din rail supports for pcb 137

CHI SIAMO

Una decennale esperienza nella distribuzione e vendita di componenti elettronici e nella produzione di morsetti da c.s..
Tutto questo è alla base del progetto "**euro-block**".
Il progetto nasce dal desiderio dei fondatori di voler colmare un vuoto nel mercato dell'elettronica offrendo "esattamente quello che il cliente cerca":
- prodotti omologati di alta qualità
- magazzino e logistica europei
- supporto tecnico e commerciale europei
- flessibilità tecnico progettuale a disposizione di tutti
- giusto prezzo

Abbiamo l'ambizione di diventare il fornitore di riferimento nel mercato europeo per un selezionato numero di linee di prodotto che spiccano per qualità, prezzo e disponibilità.
Siamo un'azienda giovane ma composta da persone "di esperienza" e con il giusto mix di competenze produttive e distributive.

Grazie all'esperienza dei soci e ad una costante dedizione siamo orgogliosi di proporre un portafoglio di prodotti leader raggruppati sotto lo stesso marchio di nostra proprietà.
Oltre ad **euro-block** gestiamo la linea di connettori per elettronica **euro-conn**.

L'intera gamma di prodotto viene gestita dalla sede centrale di Torino dalla quale siamo in grado di assistere e spedire in tutto il mondo.

Siamo membri di un gruppo imprese che ha lo scopo di offrire una soluzione a tutte le esigenze del mercato industriale, dalla progettazione alla realizzare stampi attraverso assemblaggi su scheda e cablaggi industriali.

Siamo presenti in Italia ed in Europa con agenti e distributori autorizzati.

WHO WE ARE

An important experience in the distribution of electronic components and manufacturing of pcb terminal blocks.
This is "**euro-block**".
The objective of founders is to fill a void in the electronic market by offering "exactly what the customer wants":
- high quality and approved products;
- european warehouse and logistics;
- european technical and commercial support;
- design and production flexibility for all;
- the right price.

We have the ambition to become a predominant and reliable supplier in all Europe for a selected number of product lines that excel for quality, price and availability.
We are a young company managed by experienced people who aim to offer the best mix between being a manufacturer and a distributor.
Thanks to the experience of the partners and to an accurate dedication and commitment we are proud to offer today a leading product portfolio grouped under the same logo.
In addition to **euro-block** we aslo offer the **euro-conn** range of electronic connectors.

All products are managed from our headquarters in Italy where from we are able to support, assist and deliver worldwide.

We are member of a group of companies with the aim to provide a solution for every need of the industrial market.
Thanks to this association we are able to practically offer every product or service, from "Product designing" to "pcb assembly" and "cable assembly" through "Mould designing and manufacturing".
We are present in all Europe through authorized agents and distributors.

WER WIR SIND

Ein Jahrzehnt Erfahrung im Vertrieb und Verkauf von elektronischen Komponenten und in der Produktion von Gleichstromanschlüssen.
All dies ist die Grundlage des "**euro-block**"-Projekts.
Das Projekt entstand aus dem Wunsch der Gründer, eine Lücke auf dem Elektronikmarkt zu füllen, indem "genau das angeboten wird, was der Kunde sucht":
- qualitativ hochwertige zugelassene Produkte
- Europäisches Lager und Logistik
- Europäische technische und kommerzielle Unterstützung
- technische Designflexibilität für jedermann verfügbar
- fairer Preis

Wir haben den Ehrgeiz, für eine ausgewählte Anzahl von Produktlinien, die sich durch Qualität, Preis und Verfügbarkeit auszeichnen, zum Referenzlieferanten auf dem europäischen Markt zu werden.
Wir sind ein junges Unternehmen, aber wir bestehen aus "erfahrenen" Menschen mit der richtigen Mischung aus Produktions- und Vertriebskompetenzen.

Dank der Erfahrung unserer Partner und eines konstanten Engagements sind wir stolz darauf, ein Portfolio führender Produkte anzubieten, die unter unserer eigenen Marke gruppiert sind.
Neben dem **euro-block** verwalten wir auch die Euro-Steckverbinderlinie für Elektronik.

Die gesamte Produktpalette wird von unserem Hauptsitz in Turin aus verwaltet, von wo aus wir in der Lage sind, Service und Versand weltweit durchzuführen.

Wir gehören zu einer Gruppe von Unternehmen, deren Ziel es ist, eine Lösung für alle Bedürfnisse des Industriemarktes anzubieten, vom Design über die Herstellung von Formen bis hin zu Platinenmontage und industrieller Verdrahtung.

Wir sind in Italien und Europa mit autorisierten Vertretern und Händlern vertreten.

CARATTERISTICHE PRINCIPALI

Le morsettiere ed i connettori **euro-block** sono progettati ed assemblati in conformità alle principali normative internazionali ed è previsto l'utilizzo di materiali di alta qualità.
Il corpo in plastica delle morsettiere e dei connettori è composto da un poliammide PA66 con classe di auto-estinguenza V0 e conformità alla normativa GLOW WIRE, in grado di garantire quindi la massima sicurezza in caso di incendi.
I terminali a saldare sono in lega di rame opportunamente trattati con una pre-nichelatura seguita da una stagnatura per garantire una perfetta saldabilità anche con le nuove saldature lead-free.
Il corpo morsetto è anch'esso in lega di rame con un trattamento di nichelatura per garantire una elevata resistenza alla corrosione ed all'azione degli agenti atmosferici.
La vite è in acciao con trattamento di zincatura.
Su richiesta possono essere forniti trattamenti superficiali diversi quali doratura o viti in lega di rame.

MAIN FEATURES

euro-block pcb terminal blocks and connectors are designed and manufactured in accordance with major International standards and each component is realized with high quality materials.
The plastic body is made of a PA66 Polyamide V0 self-extinguishing plastic, GLOW WIRE conform, which grants high mechanical and electrical performances.
The Soldering pin is made of copper alloy with a specific surface threatment.
Tin plating threatment over nikel plating in order to grant a safe soldering process even with the new lead free soldering system.
Connecting clamp is also made of copper alloy with a specific nickel plating that grants a high resistance to corrosion.
Screws are made of steel with a zinc plating.
It is possible, on request, to provide other surface threatments like gold-plating or copper alloy screws.

WESENTLICHE KENNZEICHEN

euro-block Leiterplattenklemmen und Steckverbinder werden gemäß den wichtigsten internationalen Standards hergestellt, und jedes einzelne Bauteil wird aus hochwertigen Materialien gefertigt.
Das Kunststoffgehäuse besteht aus PA66-Polyamid VO, GLOW WIRE KONFORM, einem selbstverlöschenden Kunststoff, der höchste mechanische und elektrische Leistung garantiert.
Die Lötpins besteht aus einer Kupferlegierung, die mit einer speziellen Oberflächenbehandlung versehen ist.
Die Zinnbeschichtung mit einer darunterliegenden Nickelschicht garantiert einen sicheren Lötprozess auch bei den bleifreien Lötprozessen.
Die Verbindungsklemme besteht aus einer Kupferlegierung mit einer speziellen Nickelbeschichtung, welche einen hohen Korrosionsschutz aufweist.
Die Schrauben bestehen aus Stahl und sind mit einer Zinnbeschichtung versehen.
Andere Oberflächenmaterialien wie Gold sind möglich, sowie Kupfer Schrauben.

NORMATIVE

I prodotti **euro-block** sono omologati e .
In fase di progettazione sono state rispettate le seguenti norme:

-CEE FOR EQUIPMENT WITHIN LOW-VOLTAGE SYSTEM DIRECTIVE 2006/95/CE.
-INTERNATIONAL STANDARDS: EN 60998-1 ; EN 60998-2-1 ; EN 61984 ; UL 1059 ; UL 486 E
-DIRECTIVE 2011/65/EC – ROHS DIRECTIVE
Directive describying the restrictions of the use of certain hazardous substances in electrical and electronic equipment.
We hereby declare that all our products do not contain Decabromodiphenylether (Deca BDE) so as provided by the judgement of April 1, 2008,Court of Justice.
-DIRECTIVE 2006/122/EC
Directive laying down rules relating to restrictions on the marketing and use of certain substances and preparations dangerous (perfluorooctane sulfonates).
-REGULATION EC no. 1907/2006 (REACH)
Regulation (EC) No 1907/2006 of the European Parliament concerning the Registration,Evaluation, Authorisation and Restriction of Chemicals (REACH), We are not producers or importers of substances, preparations or articles containing substances intended to be released, we are involved in the REACH Regulation only as downstream users of substances, preparations and articles.
We hereby declare that all our products do not contain none of Substances of Very High Concern (SVHC) wich are defined in Article 57 of Regulation (EC) No 1907/2006 (“the REACH Regulation”) and that are shown in SVHC Substance List.

STANDARDS

euro-block products are and approved.
Design and production conform to following standards:

-CEE FOR EQUIPMENT WITHIN LOW-VOLTAGE SYSTEM DIRECTIVE 2006/95/CE.
-INTERNATIONAL STANDARDS: EN 60998-1 ; EN 60998-2-1 ; EN 61984 ; UL 1059 ; UL 486 E
-DIRECTIVE 2011/65/EC – ROHS DIRECTIVE
Directive describying the restrictions of the use of certain hazardous substances in electrical and electronic equipment.
We hereby declare that all our products do not contain Decabromodiphenylether (Deca BDE) so as provided by the judgement of April 1, 2008,Court of Justice.
-DIRECTIVE 2006/122/EC
Directive laying down rules relating to restrictions on the marketing and use of certain substances and preparations dangerous (perfluorooctane sulfonates).
-REGULATION EC no. 1907/2006 (REACH)
Regulation (EC) No 1907/2006 of the European Parliament concerning the Registration,Evaluation, Authorisation and Restriction of Chemicals (REACH), We are not producers or importers of substances, preparations or articles containing substances intended to be released, we are involved in the REACH Regulation only as downstream users of substances, preparations and articles.
We hereby declare that all our products do not contain none of Substances of Very High Concern (SVHC) wich are defined in Article 57 of Regulation (EC) No 1907/2006 (“the REACH Regulation”) and that are shown in SVHC Substance List.

STANDARDS

euro-block Produkte sind und zertifiziert.
Alle euro-block -Produkte entsprechen den folgenden Standards:

-CEE FOR EQUIPMENT WITHIN LOW-VOLTAGE SYSTEM DIRECTIVE 2006/95/CE.
-INTERNATIONAL STANDARDS: EN 60998-1 ; EN 60998-2-1 ; EN 61984 ; UL 1059 ; UL 486 E
-DIRECTIVE 2011/65/EC – ROHS DIRECTIVE
Directive describying the restrictions of the use of certain hazardous substances in electrical and electronic equipment.
We hereby declare that all our products do not contain Decabromodiphenylether (Deca BDE) so as provided by the judgement of April 1, 2008,Court of Justice.
-DIRECTIVE 2006/122/EC
Directive laying down rules relating to restrictions on the marketing and use of certain substances and preparations dangerous (perfluorooctane sulfonates).
-REGULATION EC no. 1907/2006 (REACH)
Regulation (EC) No 1907/2006 of the European Parliament concerning the Registration,Evaluation, Authorisation and Restriction of Chemicals (REACH), We are not producers or importers of substances, preparations or articles containing substances intended to be released, we are involved in the REACH Regulation only as downstream users of substances, preparations and articles.
We hereby declare that all our products do not contain none of Substances of Very High Concern (SVHC) wich are defined in Article 57 of Regulation (EC) No 1907/2006 (“the REACH Regulation”) and that are shown in SVHC Substance List.

SU RICHIESTA

I prodotti **euro-block** sono sviluppati tenendo conto delle recenti innovazioni tecnologiche e di utilizzo nell'ambito della automazione industriale.
Su richiesta sono disponibili connettori adatti al processo di saldatura THT, denominata anche pin-in paste, caratterizzate dall'avere il corpo in plastica in PPA, halogen free. Questi connettori possono essere forniti con imballo in bobina per il processo di assemblaggio "pick and place".
E' possibile progettare e realizzare morsettiere su misura che si adattano alle specifiche esigenze del cliente.
I costi ed i tempi per la realizzazione di un progetto dedicato sono molto flessibili.

ON REQUEST

euro-block products are designed on a level of innovation of the industrial automation industry that entails the latest state-of-the art technology.
Furthermore, connectors for the THT soldering process, also called pin-in paste, are available on request. These connectors can also be packed in "Tape and Reel" for the pick and place assembly process.
It is possible to realize terminal blocks made "on design" according to specific customers' needs.
Developing time and costs are extremely flexible.

AUF ANFRAGE

euro-block -Produkte werden auf einem innovativen Niveau der industriellen Automatisierung entwickelt, die auf der modernsten Technologie basiert.
Darüberhinaus bieten wir Steckverbinder für den THT- Lötprozess, auch bekannt als pin-in paste, an. Diese Steckverbinder können auch gegurtet für eine automatische Bestückung geliefert werden.
Es ist möglich, kundenspezifische Leiterplattenklemmen zu entwerfen und herzustellen, um den spezifischen Anforderungen des Kunden gerecht zu werden. Die Kosten und Zeiten für die Realisierung eines dedizierten Projekts sind sehr flexibel.

SUPPORTI

L'ampia gamma di prodotti **euro-block** si completa con supporti per c.s. da guidaDIN.
Disponibili nelle versioni per schede elettroniche da 72mm e 107 mm i nostri supporti in plastica sono progettati per garantire un sistema rapido ed efficiente di composizione ed allocazione di schede elettroniche agganciabili su guide DIN.
I supporti sono proposti in versione estrusa ottenuta da un profilato tagliato a misura e serrato da apposite chiusure laterali. Questo permette di personalizzare al massimo la lunghezza del profilo adattandola a qualunque dimensione del vostro circuito stampato.
Oltre ai profili estrusi sono disponibile anche due misure di Contenitori per c.s. con relativi accessori.
I supporti per c.s. sono disponibili nei colori verde e nero.

SUPPORTS

The range of **euro-block** is completed by the new line of din rail supports for p.c.b.
euro-block supports are made of plastic and are available in dimensions of 72mm and 107mm. Their design allows a easy and quick assembly of your boards mountable on DIN rails.
Supports are offered in extruded version which can be easily cut on size for every specific dimension of your board.
In addition to extruded profiles euro-block offers also two dimensions of electronic boxes with pertaining accessories.
Our supports are available in both green and black colour.
distributors.

SUPPORTS

Die breite Palette der **euro-block**-Produkte wird durch DIN-Schienenhalterungen ergänzt.
Erhältlich in Versionen für 72-mm- und 107-mm-Elektronikplatinen sind unsere Kunststoffträger so konzipiert, dass sie ein schnelles und effizientes System für die Zusammenstellung und Zuordnung von Elektronikplatinen garantieren, die auf DIN-Schienen eingehängt werden können.
Die Stützen sind in extrudierter Ausführung erhältlich, die aus einem auf Maß geschnittenen Profil hergestellt und durch spezielle Seitenverschlüsse festgezogen werden. Dadurch können Sie die maximale Länge des Profils an jede Größe Ihrer Leiterplatte anpassen.
Zusätzlich zu den Strangpressprofilen sind auch zwei Größen von DIN-Schienengehäusen mit Zubehör erhältlich.
Die PCB-Halter sind in grün und schwarz erhältlich.

Morsettiere monopiano
Single deck terminal blocks

euro-block

SERIE/PRODUCT SERIES

	BLT31-V	BLT31-H
Passo / Pitch(mm)/ Rastermaß	3,5 mm	3,5 mm
Poli monoblocco/single mold poles/Polzahl	2÷24	2÷24
Vite / Screw / Schraube	M2.0	M2.0
Corpo isolante / Housing / Gehäuse	PA66, UL 94V0	PA66, UL 94V0
Tensione nominale/Rated Voltage/Nennspannung	250V	250V
Corrente Nominale/Rated Current/Nennstrom	10A	10A
Sezione Nominale/Wire section / Nenn querschnitt	1,5 mm2 24÷18 AWG	1,5 mm2 24÷18 AWG
Temperatura / Temperature / Temperatur	-40°C + 105°C	-40°C + 105°C
Coppia di torsione / Torque / Anzugsdrehmoment	0,2Nm (1,8 Lb in)	0,2Nm (1,8 Lb in)
Lunghezza spellatura/ Stripping lenght/ Abisolierlänge	5 mm	5 mm
VDE		
UL - cUL (file n. E342315)	10A-125V	10A-125V
*Colore standard/ Standard colour/ Standardfarbe	GN(green)	GN(green)
	BK (nero - black) / GY (grigio chiaro/light grey)	BK (nero - black) / GY (grigio chiaro/light grey)

Colori a richiesta/ Colours on request/ Farben auf Anfrage
*= da non specificare sul codice di ordinazione
Do not specify on ordering code
Muss im Bestellcode nicht angegeben werden

Per evitare sbalzi tra i morsetti ed i fori sul c.s. bisogna prevedere una interruzione quando il n. di poli è superiore a 30.

To avoid loss of pitch between terminal block and pcb it is necessary to interrupt the terminal row by poles higher than 30

Die Polzahl sollte maximal 30 betragen damit das Rastermaß von PCB und Leiterplattenklemme noch übereinstimmen

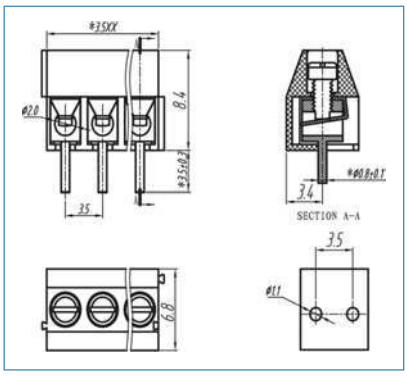

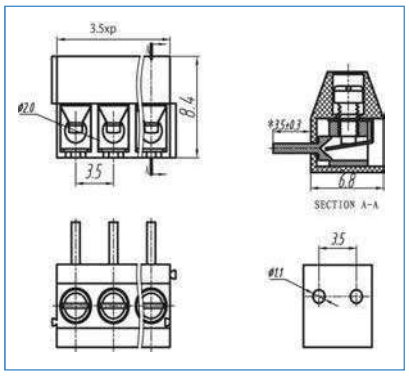

COME ORDINARE
HOW TO ORDER / BESTELLNUMMER

Series	n. poles	pitch	version	color	custom

PASSO / PITCH / RASTERMAß

2 POLI	BLT312-3.5-V	BLT312-3.5-H
3 POLI	BLT313-3.5-V	BLT313-3.5-H
	BLT314-3.5-V	BLT314-3.5-H
	BLT315-3.5-V	BLT315-3.5-H
	BLT316-3.5-V	BLT316-3.5-H
	BLT317-3.5-V	BLT317-3.5-H
	BLT318-3.5-V	BLT318-3.5-H
	BLT319-3.5-V	BLT319-3.5-H
	BLT3110-3.5-V	BLT3110-3.5-H
	BLT3111-3.5-V	BLT3111-3.5-H
	BLT3112-3.5-V	BLT3112-3.5-H
	BLT3113-3.5-V	BLT3113-3.5-H
	BLT3114-3.5-V	BLT3114-3.5-H
	BLT3115-3.5-V	BLT3115-3.5-H
	BLT3116-3.5-V	BLT3116-3.5-H
	BLT3117-3.5-V	BLT3117-3.5-H
	BLT3118-3.5-V	BLT3118-3.5-H
	BLT3119-3.5-V	BLT3119-3.5-H
	BLT3120-3.5-V	BLT3120-3.5-H
	BLT3121-3.5-V	BLT3121-3.5-H
	BLT3122-3.5-V	BLT3122-3.5-H
	BLT3123-3.5-V	BLT3123-3.5-H
24 POLI	BLT3124-3.5-V	BLT3124-3.5-H

BLT52-V

5 mm
2÷24
M2.5
PBT, UL 94V0
250V
17,5A
1,5 mm2 22÷16 AWG
-30°C + 120°C
0,4Nm (3,6 Lb in)
5 mm
16A-250V
BK(black)
GN (verde - green / GY (grigio chiaro/light grey)

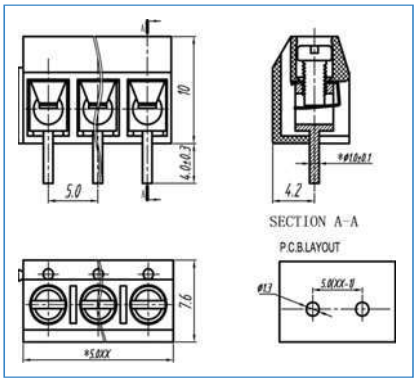

BLT52-H

5 mm
2÷24
M2.5
PBT, UL 94V0
250V
17,5A
1,5 mm2 22÷16 AWG
-30°C + 120°C
0,4Nm (3,6 Lb in)
5 mm
16A-250V
BK(black)
GN (verde - green / GY (grigio chiaro/light grey)

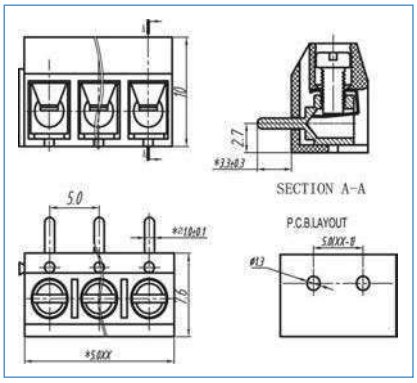

MLT52-V

5 mm
2÷24
M3
PBT, UL 94V0
250V
17,5A
1,5 mm2 22÷16 AWG
-30°C + 120°C
0,5Nm (4,5 Lb in)
5 mm
16A-250V
BK(black)
GN (verde - green / GY (grigio chiaro/light grey)

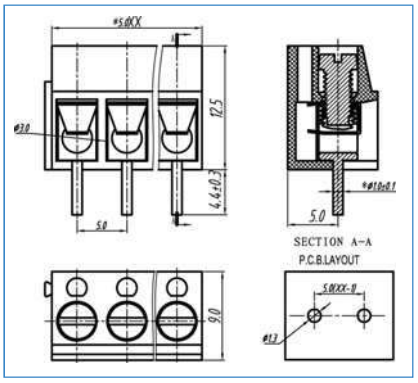

BLT522-5-V	BLT522-5-H	MLT522-5-V
BLT523-5-V	BLT523-5-H	MLT523-5-V
BLT524-5-V	BLT524-5-H	MLT524-5-V
BLT525-5-V	BLT525-5-H	MLT525-5-V
BLT526-5-V	BLT526-5-H	MLT526-5-V
BLT527-5-V	BLT527-5-H	MLT527-5-V
BLT528-5-V	BLT528-5-H	MLT528-5-V
BLT529-5-V	BLT529-5-H	MLT529-5-V
BLT5210-5-V	BLT5210-5-H	MLT5210-5-V
BLT5211-5-V	BLT5211-5-H	MLT5211-5-V
BLT5212-5-V	BLT5212-5-H	MLT5212-5-V
BLT5213-5-V	BLT5213-5-H	MLT5213-5-V
BLT5214-5-V	BLT5214-5-H	MLT5214-5-V
BLT5215-5-V	BLT5215-5-H	MLT5215-5-V
BLT5216-5-V	BLT5216-5-H	MLT5216-5-V
BLT5217-5-V	BLT5217-5-H	MLT5217-5-V
BLT5218-5-V	BLT5218-5-H	MLT5218-5-V
BLT5219-5-V	BLT5219-5-H	MLT5219-5-V
BLT5220-5-V	BLT5220-5-H	MLT5220-5-V
BLT5221-5-V	BLT5221-5-H	MLT5221-5-V
BLT5222-5-V	BLT5222-5-H	MLT5222-5-V
BLT5223-5-V	BLT5223-5-H	MLT5223-5-V
BLT5224-5-V	BLT5224-5-H	MLT5224-5-V

euro-block

SERIE/PRODUCT SERIES	MLT52-H	MLT72-V
Passo / Pitch(mm)/ Rastermaß	5 mm	7,5 mm
Poli monoblocco/single mold poles/Polzahl	2÷24	2÷24
Vite / Screw / Schraube	M3	M3
Corpo isolante / Housing / Gehäuse	PBT, UL 94V0	PBT, UL 94V0
Tensione nominale/Rated Voltage/Nennspannung	250V	450V
Corrente Nominale/Rated Current/Nennstrom	17,5A	24A
Sezione Nominale/Wire section / Nenn querschnitt	1,5 mm2 22÷16 AWG	1,5 mm2 22÷16 AWG
Temperatura / Temperature / Temperatur	-30°C + 120°C	-30°C + 120°C
Coppia di torsione / Torque / Anzugsdrehmoment	0,5Nm (4,5 Lb in)	0,5Nm (4,5 Lb in)
Lunghezza spellatura/ Stripping lenght/ Abisolierlänge	5 mm	5 mm
VDE		
UL - cUL (file n. E342315)	16A-250V	16A-250V
*Colore standard/ Standard colour/ Standardfarbe	BK(black)	BK(black)
	GN (verde - green / GY (grigio chiaro/light grey)	GN (verde - green / GY (grigio chiaro/light grey)

Colori a richiesta/ Colours on request/ Farben auf Anfrage
*= da non specificare sul codice di ordinazione
Do not specify on ordering code
Muss im Bestellcode nicht angegeben werden

Per evitare sbalzi tra i morsetti ed i fori sul c.s. bisogna prevedere una interruzione quando il n. di poli è superiore a 30.

To avoid loss of pitch between terminal block and pcb it is necessary to interrupt the terminal row by poles higher than 30

Die Polzahl sollte maximal 30 betragen damit das Rastermaß von PCB und Leiterplattenklemme noch übereinstimmen

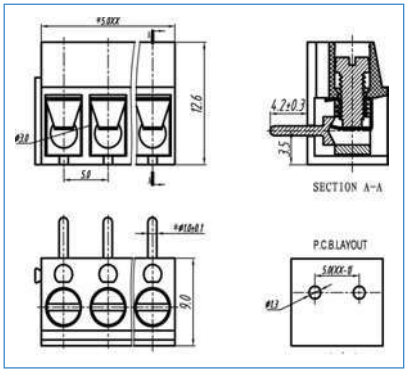

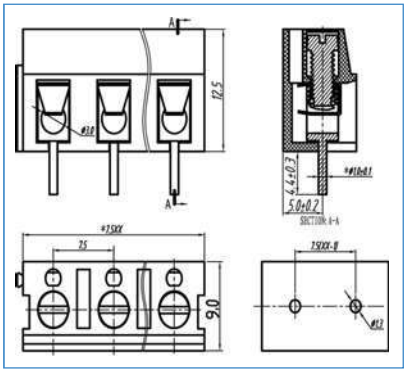

COME ORDINARE
HOW TO ORDER / BESTELLNUMMER

Series	n. poles	pitch	version	color	custom

PASSO / PITCH / RASTERMAß

2 POLI	MLT522-5-H	MLT722-7.5-V
3 POLI	MLT523-5-H	MLT723-7.5-V
	MLT524-5-H	MLT724-7.5-V
	MLT525-5-H	MLT725-7.5-V
	MLT526-5-H	MLT726-7.5-V
	MLT527-5-H	MLT727-7.5-V
	MLT528-5-H	MLT728-7.5-V
	MLT529-5-H	MLT729-7.5-V
	MLT5210-5-H	MLT7210-7.5-V
	MLT5211-5-H	MLT7211-7.5-V
	MLT5212-5-H	MLT7212-7.5-V
	MLT5213-5-H	MLT7213-7.5-V
	MLT5214-5-H	MLT7214-7.5-V
	MLT5215-5-H	MLT7215-7.5-V
	MLT5216-5-H	MLT7216-7.5-V
	MLT5217-5-H	MLT7217-7.5-V
	MLT5218-5-H	MLT7218-7.5-V
	MLT5219-5-H	MLT7219-7.5-V
	MLT5220-5-H	MLT7220-7.5-V
	MLT5221-5-H	MLT7221-7.5-V
	MLT5222-5-H	MLT7222-7.5-V
	MLT5223-5-H	MLT7223-7.5-V
24 POLI	MLT5224-5-H	MLT7224-7.5-V

BLR51-V

5 mm
2÷24
M2.5
PA66, UL 94V0
250V
18A
1,5 mm2 22÷16 AWG
-40°C + 105°C
0,4Nm (3,6 Lb in)
7 mm
8A-300V
GN(green)
BK (nero - black) / GY (grigio chiaro/light grey)

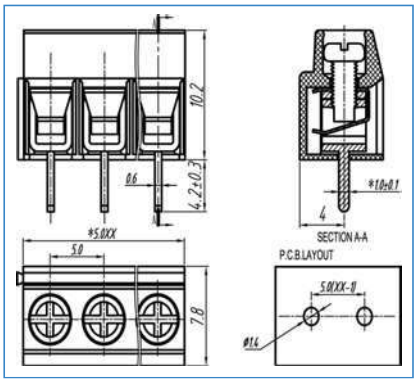

BLR512-5-V
BLR513-5-V
BLR514-5-V
BLR515-5-V
BLR516-5-V
BLR517-5-V
BLR518-5-V
BLR519-5-V
BLR5110-5-V
BLR5111-5-V
BLR5112-5-V
BLR5113-5-V
BLR5114-5-V
BLR5115-5-V
BLR5116-5-V
BLR5117-5-V
BLR5118-5-V
BLR5119-5-V
BLR5120-5-V
BLR5121-5-V
BLR5122-5-V
BLR5123-5-V
BLR5124-5-V

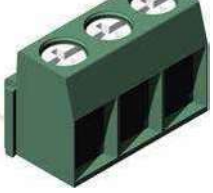

BLR51-H

5 mm
2÷24
M2.5
PA66, UL 94V0
250V
18A
1,5 mm2 22÷16 AWG
-40°C + 105°C
0,4Nm (3,6 Lb in)
7 mm
8A-300V
GN(green)
BK (nero - black) / GY (grigio chiaro/light grey)

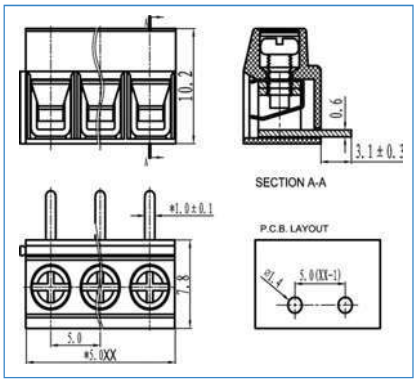

BLR512-5-H
BLR513-5-H
BLR514-5-H
BLR515-5-H
BLR516-5-H
BLR517-5-H
BLR518-5-H
BLR519-5-H
BLR5110-5-H
BLR5111-5-H
BLR5112-5-H
BLR5113-5-H
BLR5114-5-H
BLR5115-5-H
BLR5116-5-H
BLR5117-5-H
BLR5118-5-H
BLR5119-5-H
BLR5120-5-H
BLR5121-5-H
BLR5122-5-H
BLR5123-5-H
BLR5124-5-H

BLR52-V

5 mm
2÷24
M2.5
PBT, UL 94V0
250V
17,5A
1,5 mm2 22÷16 AWG
-30°C + 120°C
0,4Nm (3,6 Lb in)
5 mm
16A-250V
GN(green)
BK (nero - black) / GY (grigio chiaro/light grey)

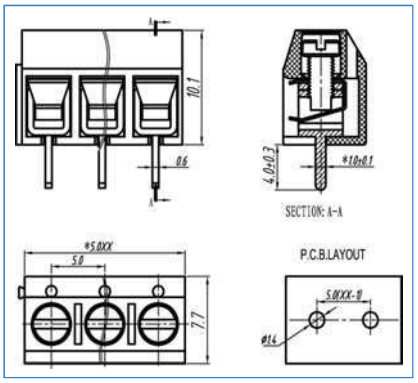

BLR522-5-V
BLR523-5-V
BLR524-5-V
BLR525-5-V
BLR526-5-V
BLR527-5-V
BLR528-5-V
BLR529-5-V
BLR5210-5-V
BLR5211-5-V
BLR5212-5-V
BLR5213-5-V
BLR5214-5-V
BLR5215-5-V
BLR5216-5-V
BLR5217-5-V
BLR5218-5-V
BLR5219-5-V
BLR5220-5-V
BLR5221-5-V
BLR5222-5-V
BLR5223-5-V
BLR5224-5-V

euro-block

SERIE/PRODUCT SERIES	MLR52-V	MLR72-V
Passo / Pitch(mm)/ Rastermaß	5 mm	7,5 mm
Poli monoblocco/single mold poles/Polzahl	2÷24	2÷24
Vite / Screw / Schraube	M3	M3
Corpo isolante / Housing / Gehäuse	PBT, UL 94V0	PBT, UL 94V0
Tensione nominale/Rated Voltage/Nennspannung	250V	450V
Corrente Nominale/Rated Current/Nennstrom	17,5A	24A
Sezione Nominale/Wire section / Nenn querschnitt	2,5 mm2 22÷14 AWG	2,5 mm2 22÷14 AWG
Temperatura / Temperature / Temperatur	-30°C + 120°C	-30°C + 120°C
Coppia di torsione / Torque / Anzugsdrehmoment	0,5Nm (4,5 Lb in)	0,5Nm (4,5 Lb in)
Lunghezza spellatura/ Stripping lenght/ Abisolierlänge	5 mm	5 mm
VDE		
UL - cUL (file n. E342315)	16A-250V	16A-250V
*Colore standard/ Standard colour/ Standardfarbe	GN(green)	GN(green)
	BK (nero - black) / GY (grigio chiaro/light grey)	BK (nero - black) / GY (grigio chiaro/light grey)

Colori a richiesta/ Colours on request/ Farben auf Anfrage
*= da non specificare sul codice di ordinazione
Do not specify on ordering code
Muss im Bestellcode nicht angegeben werden

Per evitare sbalzi tra i morsetti ed i fori sul c.s. bisogna prevedere una interruzione quando il n. di poli è superiore a 30.

To avoid loss of pitch between terminal block and pcb it is necessary to interrupt the terminal row by poles higher than 30

Die Polzahl sollte maximal 30 betragen damit das Rastermaß von PCB und Leiterplattenklemme noch übereinstimmen

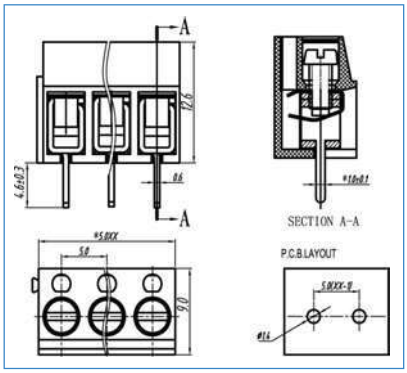

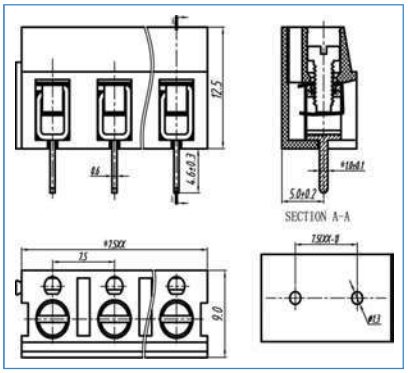

COME ORDINARE
HOW TO ORDER / BESTELLNUMMER

Series	n. poles	pitch	version	color	custom

PASSO / PITCH / RASTERMAß		
2 POLI	MLR522-5-V	MLR722-7.5-V
3 POLI	MLR523-5-V	MLR723-7.5.V
	MLR524-5-V	MLR724-7.5-V
	MLR525-5-V	MLR725-7.5-V
	MLR526-5-V	MLR726-7.5-V
	MLR527-5-V	MLR727-7.5-V
	MLR528-5-V	MLR728-7.5-V
	MLR529-5-V	MLR729-7.5-V
	MLR5210-5-V	MLR7210-7.5-V
	MLR5211-5-V	MLR7211-7.5-V
	MLR5212-5-V	MLR7212-7.5-V
	MLR5213-5-V	MLR7213-7.5-V
	MLR5214-5-V	MLR7214-7.5-V
	MLR5215-5-V	MLR7215-7.5-V
	MLR5216-5-V	MLR7216-7.5-V
	MLR5217-5-V	MLR7217-7.5-V
	MLR5218-5-V	MLR7218-7.5-V
	MLR5219-5-V	MLR7219-7.5-V
	MLR5220-5-V	MLR7220-7.5-V
	MLR5221-5-V	MLR7221-7.5-V
	MLR5222-5-V	MLR7222-7.5-V
	MLR5223-5-V	MLR7223-7.5-V
24 POLI	MLR5224-5-V	MLR7224-7.5-V

MLR51-V

5 mm
2÷24
M2.5
PA66, UL 94V0
250V
24A
2,5 mm2 26÷14 AWG
-40°C + 105°C
0,4Nm (3,6 Lb in)
7 mm
15A-300V
GN(green)
BK (nero - black) / GY (grigio chiaro/light grey)

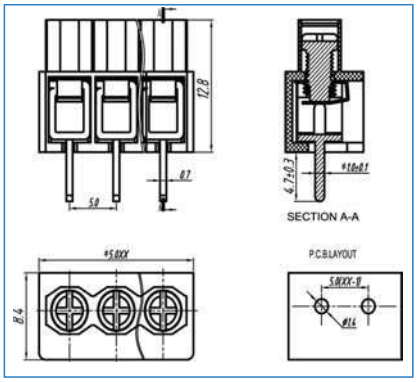

MMR52-V

5 mm
2÷24
M2.5
PA66, UL 94V0
250V
24A
2,5 mm2 26÷14 AWG
-40°C + 105°C
0,4Nm (3,6 Lb in)
7 mm
15A-300V
GN(green)
BK (nero - black) / GY (grigio chiaro/light grey)

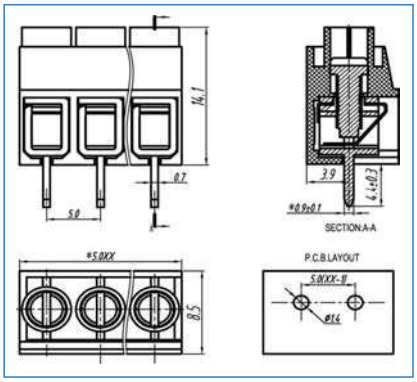

MMR52-H

5 mm
2÷24
M2.5
PA66, UL 94V0
250V
24A
2,5 mm2 26÷14 AWG
-40°C + 105°C
0,4Nm (3,6 Lb in)
7 mm
15A-300V
GN(green)
BK (nero - black) / GY (grigio chiaro/light grey)

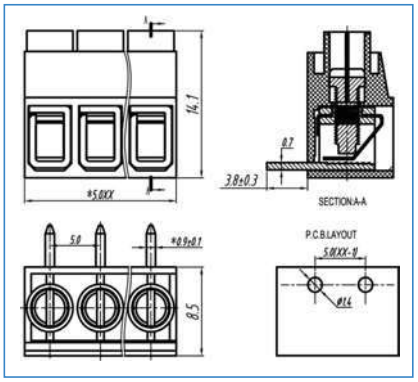

MLR512-5-V	MMR522-5-V	MMR522-5-H
MLR513-5-V	MMR523-5-V	MMR523-5-H
MLR514-5-V	MMR524-5-V	MMR524-5-H
MLR515-5-V	MMR525-5-V	MMR525-5-H
MLR516-5-V	MMR526-5-V	MMR526-5-H
MLR517-5-V	MMR527-5-V	MMR527-5-H
MLR518-5-V	MMR528-5-V	MMR528-5-H
MLR519-5-V	MMR529-5-V	MMR529-5-H
MLR5110-5-V	MMR5210-5-V	MMR5210-5-H
MLR5111-5-V	MMR5211-5-V	MMR5211-5-H
MLR5112-5-V	MMR5212-5-V	MMR5212-5-H
MLR5113-5-V	MMR5213-5-V	MMR5213-5-H
MLR5114-5-V	MMR5214-5-V	MMR5214-5-H
MLR5115-5-V	MMR5215-5-V	MMR5215-5-H
MLR5116-5-V	MMR5216-5-V	MMR5216-5-H
MLR5117-5-V	MMR5217-5-V	MMR5217-5-H
MLR5118-5-V	MMR5218-5-V	MMR5218-5-H
MLR5119-5-V	MMR5219-5-V	MMR5219-5-H
MLR5120-5-V	MMR5220-5-V	MMR5220-5-H
MLR5121-5-V	MMR5221-5-V	MMR5221-5-H
MLR5122-5-V	MMR5222-5-V	MMR5222-5-H
MLR5123-5-V	MMR5223-5-V	MMR5223-5-H
MLR5124-5-V	MMR5224-5-V	MMR5224-5-H

euro-block

SERIE/PRODUCT SERIES

	MRB21-V	MRB31-V	
Passo / Pitch(mm)/ Rastermaß	2,54 mm	3,5 mm	3,81 mm
Poli monoblocco/single mold poles/Polzahl	2÷24	2÷24	
Vite / Screw / Schraube	M1,6	M2.0	
Corpo isolante / Housing / Gehäuse	PA66, UL 94V0	PA66, UL 94V0	
Tensione nominale/Rated Voltage/Nennspannung	150V	250V	
Corrente Nominale/Rated Current/Nennstrom	8A	15A	
Sezione Nominale/Wire section / Nenn querschnitt	1 mm2 26÷18 AWG	1,5 mm2 30÷16 AWG	
Temperatura / Temperature / Temperatur	-40°C + 105°C	-40°C + 105°C	
Coppia di torsione / Torque / Anzugsdrehmoment	0,1Nm (1,02 Lb in)	0,2Nm (1,8 Lb in)	
Lunghezza spellatura/ Stripping lenght/ Abisolierlänge		6 mm	
VDE		13.5A-160V	
UL - cUL (file n. E342315)	7A-150V	15A-300V	
*Colore standard/ Standard colour/ Standardfarbe	GN(green)	GN(green)	
	BK (nero - black) / GY (grigio chiaro/light grey)	BK (nero - black) / GY (grigio chiaro/light grey)	

Colori a richiesta/ Colours on request/ Farben auf Anfrage
*= da non specificare sul codice di ordinazione
Do not specify on ordering code
Muss im Bestellcode nicht angegeben werden

Per evitare sbalzi tra i morsetti ed i fori sul c.s. bisogna prevedere una interruzione quando il n. di poli è superiore a 30.

To avoid loss of pitch between terminal block and pcb it is necessary to interrupt the terminal row by poles higher than 30

Die Polzahl sollte maximal 30 betragen damit das Rastermaß von PCB und Leiterplattenklemme noch übereinstimmen

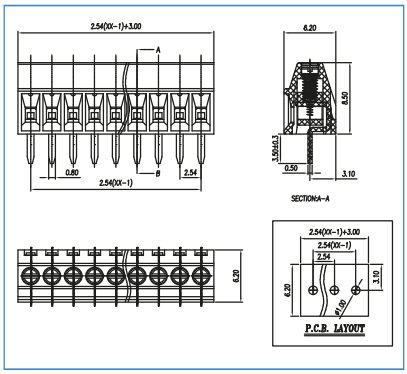

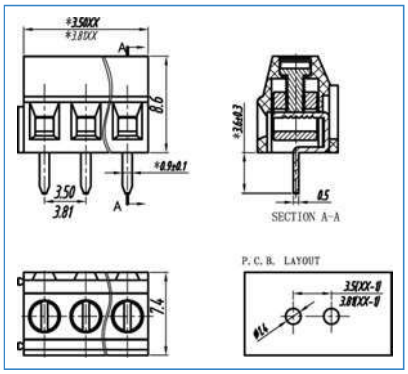

COME ORDINARE
HOW TO ORDER / BESTELLNUMMER

Series	n. poles	pitch	version	color	custom

PASSO / PITCH / RASTERMAß

2 POLI	MRB212-2.54-V	MRB312-3.5-V	MRB312-3,81-V
3 POLI	MRB213-2.54-V	MRB313-3.5-V	MRB313-3.81-V
	MRB214-2.54-V	MRB314-3.5-V	MRB314-3.81-V
	MRB215-2.54-V	MRB315-3.5-V	MRB315-3.81-V
	MRB216-2.54-V	MRB316-3.5-V	MRB316-3.81-V
	MRB217-2.54-V	MRB317-3.5-V	MRB317-3.81-V
	MRB218-2.54-V	MRB318-3.5-V	MRB318-3.81-V
	MRB219-2.54-V	MRB319-3.5-V	MRB319-3.81-V
	MRB2110-2.54-V	MRB3110-3.5-V	MRB3110-3.81-V
	MRB2111-2.54-V	MRB3111-3.5-V	MRB3111-3.81-V
	MRB2112-2.54-V	MRB3112-3.5-V	MRB3112-3.81-V
	MRB2113-2.54-V	MRB3113-3.5-V	MRB3113-3.81-V
	MRB2114-2.54-V	MRB3114-3.5-V	MRB3114-3.81-V
	MRB2115-2.54-V	MRB3115-3.5-V	MRB3115-3.81-V
	MRB2116-2.54-V	MRB3116-3.5-V	MRB3116-3.81-V
	MRB2117-2.54-V	MRB3117-3.5-V	MRB3117-3.81-V
	MRB2118-2.54-V	MRB3118-3.5-V	MRB3118-3.81-V
	MRB2119-2.54-V	MRB3119-3.5-V	MRB3119-3.81-V
	MRB2120-2.54-V	MRB3120-3.5-V	MRB3120-3.81-V
	MRB2121-2.54-V	MRB3121-3.5-V	MRB3121-3.81-V
	MRB2122-2.54-V	MRB3122-3.5-V	MRB3122-3.81-V
	MRB2123-2.54-V	MRB3123-3.5-V	MRB3123-3.81-V
24 POLI	MRB2124-2.54-V	MRB3124-3.5-V	MRB3124-3.81-V

MRB51-V

5 mm	5,08 mm
2÷24	
M2.5	
PA66, UL 94V0	
250V	
15A	
1,5 mm2 22÷16 AWG	
-40°C + 105°C	
0,4Nm (3,6 Lb in)	
7 mm	
8A-300V	
GN(green)	
BK (nero - black) / GY (grigio chiaro/light grey)	

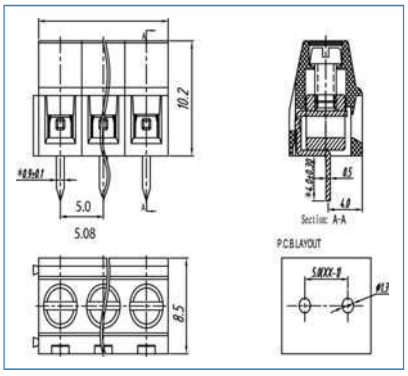

MRS52-V

5 mm
2÷24
M2.5
PA66, UL 94V0
250V
20A
2,5 mm2 22÷12 AWG
-40°C + 105°C
0,4Nm (3,6 Lb in)
7 mm
20A-250V
10A-300V
GN(green)
BK (nero - black) / GY (grigio chiaro/light grey)

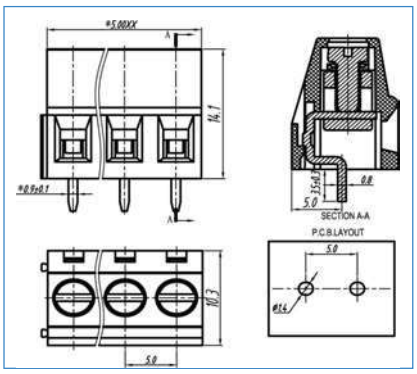

MRC52-V

5 mm
2÷24
M2.5
PA66, UL 94V0
250V
18A
2,5 mm2 22÷12 AWG
-40°C + 105°C
0,4Nm (3,6 Lb in)
6 mm
16A-300V
GN(green)
BK (nero - black) / GY (grigio chiaro/light grey)

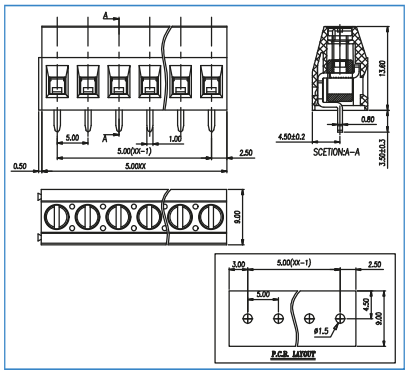

MRB512-5-V	MRB512-5.08-V	MRS522-5-V	MRC522-5-V
MRB513-5-V	MRB513-5.08-V	MRS523-5-V	MRC523-5-V
MRB514-5-V	MRB514-5.08-V	MRS524-5-V	MRC524-5-V
MRB515-5-V	MRB515-5.08-V	MRS525-5-V	MRC525-5-V
MRB516-5-V	MRB516-5.08-V	MRS526-5-V	MRC526-5-V
MRB517-5-V	MRB517-5.08-V	MRS527-5-V	MRC527-5-V
MRB518-5-V	MRB518-5.08-V	MRS528-5-V	MRC528-5-V
MRB519-5-V	MRB519-5.08-V	MRS529-5-V	MRC529-5-V
MRB5110-5-V	MRB5110-5.08-V	MRS5210-5-V	MRC5210-5-V
MRB5111-5-V	MRB5111-5.08-V	MRS5211-5-V	MRC5211-5-V
MRB5112-5-V	MRB5112-5.08-V	MRS5212-5-V	MRC5212-5-V
MRB5113-5-V	MRB5113-5.08-V	MRS5213-5-V	MRC5213-5-V
MRB5114-5-V	MRB5114-5.08-V	MRS5214-5-V	MRC5214-5-V
MRB5115-5-V	MRB5115-5.08-V	MRS5215-5-V	MRC5215-5-V
MRB5116-5-V	MRB5116-5.08-V	MRS5216-5-V	MRC5216-5-V
MRB5117-5-V	MRB5117-5.08-V	MRS5217-5-V	MRC5217-5-V
MRB5118-5-V	MRB5118-5.08-V	MRS5218-5-V	MRC5218-5-V
MRB5119-5-V	MRB5119-5.08-V	MRS5219-5-V	MRC5219-5-V
MRB5120-5-V	MRB5120-5.08-V	MRS5220-5-V	MRC5220-5-V
MRB5121-5-V	MRB5121-5.08-V	MRS5221-5-V	MRC5221-5-V
MRB5122-5-V	MRB5122-5.08-V	MRS5222-5-V	MRC5222-5-V
MRB5123-5-V	MRB5123-5.08-V	MRS5223-5-V	MRC5223-5-V
MRB5124-5-V	MRB5124-5.08-V	MRS5224-5-V	MRC5224-5-V

euro-block

SERIE/PRODUCT SERIES	MRS52-H	MRS52-D
Passo / Pitch(mm)/ Rastermaß	5 mm	5 mm
Poli monoblocco/single mold poles/Polzahl	2÷24	2÷24
Vite / Screw / Schraube	M2.5	M2.5
Corpo isolante / Housing / Gehäuse	PA66, UL 94V0	PA66, UL 94V0
Tensione nominale/Rated Voltage/Nennspannung	250V	250V
Corrente Nominale/Rated Current/Nennstrom	20A	20A
Sezione Nominale/Wire section / Nenn querschnitt	2,5 mm2 22÷12 AWG	2,5 mm2 22÷12 AWG
Temperatura / Temperature / Temperatur	-40°C + 105°C	-40°C + 105°C
Coppia di torsione / Torque / Anzugsdrehmoment	0,4Nm (3,6 Lb in)	0,4Nm (3,6 Lb in)
Lunghezza spellatura/ Stripping lenght/ Abisolierlänge	7 mm	7 mm
VDE	20A–250V	
UL - cUL (file n. E342315)	10A-300V	
*Colore standard/ Standard colour/ Standardfarbe	GN(green)	GN(green)
	BK (nero - black) / GY (grigio chiaro/light grey)	BK (nero - black) / GY (grigio chiaro/light grey)

Colori a richiesta/ Colours on request/ Farben auf Anfrage
*= da non specificare sul codice di ordinazione
Do not specify on ordering code
Muss im Bestellcode nicht angegeben werden

Per evitare sbalzi tra i morsetti ed i fori sul c.s. bisogna prevedere una interruzione quando il n. di poli è superiore a 30.

To avoid loss of pitch between terminal block and pcb it is necessary to interrupt the terminal row by poles higher than 30

Die Polzahl sollte maximal 30 betragen damit das Rastermaß von PCB und Leiterplattenklemme noch übereinstimmen

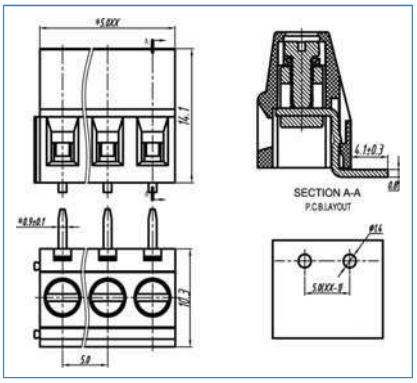

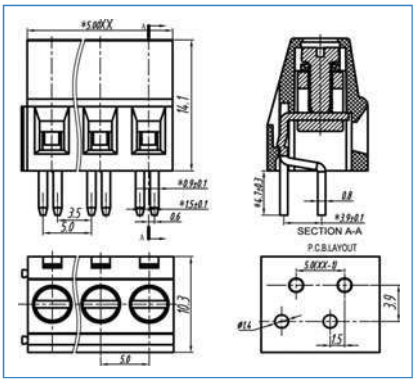

COME ORDINARE
HOW TO ORDER / BESTELLNUMMER

Series	n. poles	pitch	version	color	custom

PASSO / PITCH / RASTERMAß

2 POLI	MRS522-5-H	MRS522-5-D
3 POLI	MRS523-5-H	MRS523-5-D
	MRS524-5-H	MRS524-5-D
	MRS525-5-H	MRS525-5-D
	MRS526-5-H	MRS526-5-D
	MRS527-5-H	MRS527-5-D
	MRS528-5-H	MRS528-5-D
	MRS529-5-H	MRS529-5-D
	MRS5210-5-H	MRS5210-5-D
	MRS5211-5-H	MRS5211-5-D
	MRS5212-5-H	MRS5212-5-D
	MRS5213-5-H	MRS5213-5-D
	MRS5214-5-H	MRS5214-5-D
	MRS5215-5-H	MRS5215-5-D
	MRS5216-5-H	MRS5216-5-D
	MRS5217-5-H	MRS5217-5-D
	MRS5218-5-H	MRS5218-5-D
	MRS5219-5-H	MRS5219-5-D
	MRS5220-5-H	MRS5220-5-D
	MRS5221-5-H	MRS5221-5-D
	MRS5222-5-H	MRS5222-5-D
	MRS5223-5-H	MRS5223-5-D
	MRS5224-5-H	MRS5224-5-D

MRS52-V

7,5 mm
2÷24
M2.5
PA66, UL 94V0
250V
20A
2,5 mm2 22÷12 AWG
-40°C + 105°C
0,4Nm (3,6 Lb in)
7 mm
20A-450V
10A-300V
GN(green)
BK (nero - black) / GY (grigio chiaro/light grey)

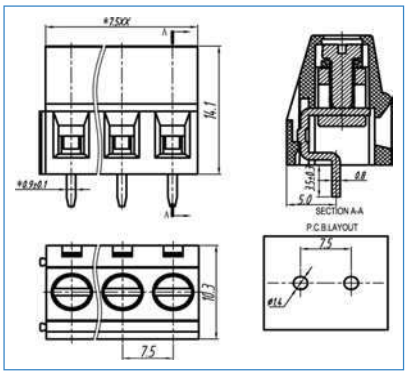

MRS522-7.5-V
MRS523-7.5-V
MRS524-7.5-V
MRS525-7.5-V
MRS526-7.5-V
MRS527-7.5-V
MRS528-7.5-V
MRS529-7.5-V
MRS5210-7.5-V
MRS5211-7.5-V
MRS5212-7.5-V
MRS5213-7.5-V
MRS5214-7.5-V
MRS5215-7.5-V
MRS5216-7.5-V
MRS5217-7.5-V
MRS5218-7.5-V
MRS5219-7.5-V
MRS5220-7.5-V
MRS5221-7.5-V
MRS5222-7.5-V
MRS5223-7.5-V
MRS5224-7.5-V

MRS52-H

7,5 mm
2÷24
M2.5
PA66, UL 94V0
250V
20A
2,5 mm2 22÷12 AWG
-40°C + 105°C
0,4Nm (3,6 Lb in)
7 mm
20A-450V
10A-300V
GN(green)
BK (nero - black) / GY (grigio chiaro/light grey)

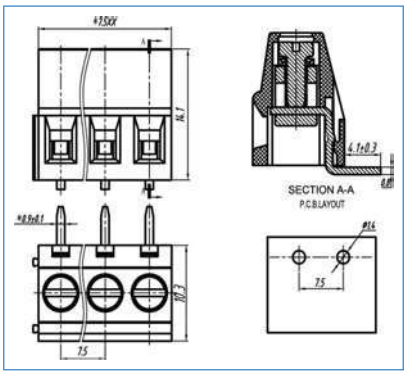

MRS522-7.5-H
MRS523-7.5-H
MRS524-7.5-H
MRS525-7.5-H
MRS526-7.5-H
MRS527-7.5-H
MRS528-7.5-H
MRS529-7.5-H
MRS5210-7.5-H
MRS5211-7.5-H
MRS5212-7.5-H
MRS5213-7.5-H
MRS5214-7.5-H
MRS5215-7.5-H
MRS5216-7.5-H
MRS5217-7.5-H
MRS5218-7.5-H
MRS5219-7.5-H
MRS5220-7.5-H
MRS5221-7.5-H
MRS5222-7.5-H
MRS5223-7.5-H
MRS5224-7.5-H

MRR52-V

5 mm	5,08 mm
2÷24	
M2.5	
PA66, UL 94V0	
250V	
18A	
2,5 mm2 30÷14 AWG	
-40°C + 105°C	
0,4Nm (3,6 Lb in)	
7 mm	
15A-300V	
GN(green)	
BK (nero - black) / GY (grigio chiaro/light grey)	

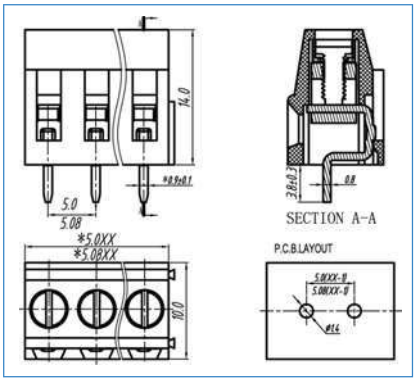

MRR522-5-V	MRR522-5.08-V
MRR523-5-V	MRR523-5.08-V
MRR524-5-V	MRR524-5.08-V
MRR525-5-V	MRR525-5.08-V
MRR526-5-V	MRR526-5.08-V
MRR527-5-V	MRR527-5.08-V
MRR528-5-V	MRR528-5.08-V
MRR529-5-V	MRR529-5.08-V
MRR5210-5-V	MRR5210-5.08-V
MRR5211-5-V	MRR5211-5.08-V
MRR5212-5-V	MRR5212-5.08-V
MRR5213-5-V	MRR5213-5.08-V
MRR5214-5-V	MRR5214-5.08-V
MRR5215-5-V	MRR5215-5.08-V
MRR5216-5-V	MRR5216-5.08-V
MRR5217-5-V	MRR5217-5.08-V
MRR5218-5-V	MRR5218-5.08-V
MRR5219-5-V	MRR5219-5.08-V
MRR5220-5-V	MRR5220-5.08-V
MRR5221-5-V	MRR5221-5.08-V
MRR5222-5-V	MRR5222-5.08-V
MRR5223-5-V	MRR5223-5.08-V
MRR5224-5-V	MRR5224-5.08-V

euro-block

SERIE/PRODUCT SERIES

	MRK52-V	MRA52-V
Passo / Pitch(mm)/ Rastermaß	5 mm	5,08 mm 7,62 mm
Poli monoblocco/single mold poles/Polzahl	2÷24	2÷24
Vite / Screw / Schraube	M3	M3
Corpo isolante / Housing / Gehäuse	PA66, UL 94V0	PA66, UL 94V0
Tensione nominale/Rated Voltage/Nennspannung	250V	250V
Corrente Nominale/Rated Current/Nennstrom	24A	20A
Sezione Nominale/Wire section / Nenn querschnitt	2,5 mm2 24÷14 AWG	2,5 mm2 26÷12 AWG
Temperatura / Temperature / Temperatur	-40°C + 105°C	-40°C + 105°C
Coppia di torsione / Torque / Anzugsdrehmoment	0,5Nm (4,5 Lb in)	0,5Nm (4,5 Lb in)
Lunghezza spellatura/ Stripping lenght/ Abisolierlänge	7 mm	7 mm
VDE		20A-250V 20A-450V
UL - cUL (file n. E342315)	10A-300V	16A-300V
*Colore standard/ Standard colour/ Standardfarbe	GN(green)	GN(green)
	BK (nero - black) / GY (grigio chiaro/light grey)	BK (nero - black) / GY (grigio chiaro/light grey)

Colori a richiesta/ Colours on request/ Farben auf Anfrage
*= da non specificare sul codice di ordinazione
Do not specify on ordering code
Muss im Bestellcode nicht angegeben werden

Per evitare sbalzi tra i morsetti ed i fori sul c.s. bisogna prevedere una interruzione quando il n. di poli è superiore a 30.

To avoid loss of pitch between terminal block and pcb it is necessary to interrupt the terminal row by poles higher than 30

Die Polzahl sollte maximal 30 betragen damit das Rastermaß von PCB und Leiterplattenklemme noch übereinstimmen

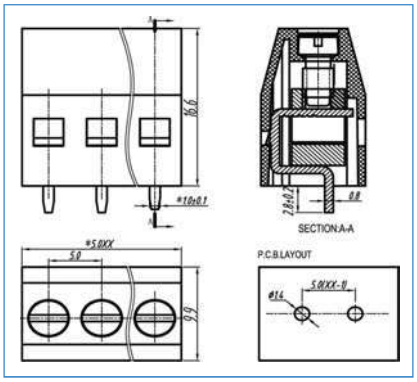

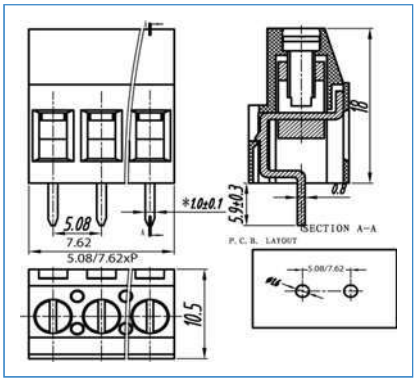

COME ORDINARE
HOW TO ORDER / BESTELLNUMMER

Series	n. poles	pitch	version	color	

PASSO / PITCH / RASTERMAẞ

2 POLI	MRK522-5-V	MRA522-5.08-V	MRA522-7.62-V
3 POLI	MRK523-5-V	MRA523-5.08-V	MRA523-7.62-V
	MRK524-5-V	MRA524-5.08-V	MRA524-7.62-V
	MRK525-5-V	MRA525-5.08-V	MRA525-7.62-V
	MRK526-5-V	MRA526-5.08-V	MRA526-7.62-V
	MRK527-5-V	MRA527-5.08-V	MRA527-7.62-V
	MRK528-5-V	MRA528-5.08-V	MRA528-7.62-V
	MRK529-5-V	MRA529-5.08-V	MRA529-7.62-V
	MRK5210-5-V	MRA5210-5.08-V	MRA5210-7.62-V
	MRK5211-5-V	MRA5211-5.08-V	MRA5211-7.62-V
	MRK5212-5-V	MRA5212-5.08-V	MRA5212-7.62-V
	MRK5213-5-V	MRA5213-5.08-V	MRA5213-7.62-V
	MRK5214-5-V	MRA5214-5.08-V	MRA5214-7.62-V
	MRK5215-5-V	MRA5215-5.08-V	MRA5215-7.62-V
	MRK5216-5-V	MRA5216-5.08-V	MRA5216-7.62-V
	MRK5217-5-V	MRA5217-5.08-V	MRA5217-7.62-V
	MRK5218-5-V	MRA5218-5.08-V	MRA5218-7.62-V
	MRK5219-5-V	MRA5219-5.08-V	MRA5219-7.62-V
	MRK5220-5-V	MRA5220-5.08-V	MRA5220-7.62-V
	MRK5221-5-V	MRA5221-5.08-V	MRA5221-7.62-V
	MRK5222-5-V	MRA5222-5.08-V	MRA5222-7.62-V
	MRK5223-5-V	MRA5223-5.08-V	MRA5223-7.62-V
	MRK5224-5-V	MRA5224-5.08-V	MRA5224-7.62-V

MRA52-H

5,08 mm	7,62 mm
2÷24	
M3	
PA66, UL 94V0	
250V	
20A	
2,5 mm2 26÷12 AWG	
-40°C + 105°C	
0,5Nm (4,5 Lb in)	
7 mm	
20A-250V	20A-450V
16A-300V	
GN(green)	
BK (nero - black) / GY (grigio chiaro/light grey)	

MRS64-V

6,35 mm
2÷24
M3
PA66, UL 94V0
450V
32A
4 mm2 26÷10 AWG
-40°C + 105°C
0,5Nm (4,5 Lb in)
7 mm
30A-300V
GN(green)
BK (nero - black) / GY (grigio chiaro/light grey)

MRS66-V

6,35 mm
2÷24
M3
PA66, UL 94V0
450V
32A
4 mm2 26÷10 AWG
-40°C + 105°C
0,5Nm (4,5 Lb in)
7 mm
30A-300V
GN(green)
BK (nero - black) / GY (grigio chiaro/light grey)

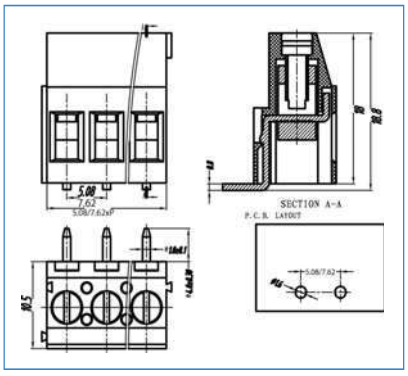

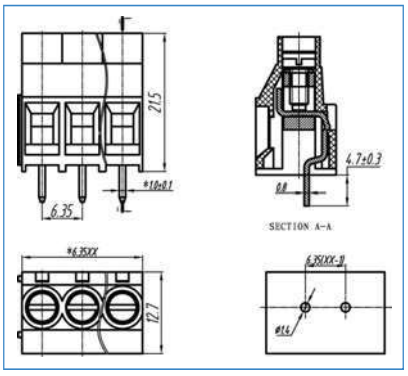

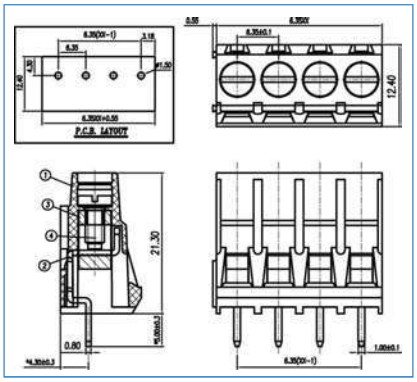

MRA522-5.08-H	MRA522-7.62-H	MRS642-6.35-V	MRS662-6.35-V
MRA523-5.08-H	MRA523-7.62-H	MRS643-6.35-V	MRS663-6.35-V
MRA524-5.08-H	MRA524-7.62-H	MRS644-6.35-V	MRS664-6.35-V
MRA525-5.08-H	MRA525-7.62-H	MRS645-6.35-V	MRS665-6.35-V
MRA526-5.08-H	MRA526-7.62-H	MRS646-6.35-V	MRS666-6.35-V
MRA527-5.08-H	MRA527-7.62-H	MRS647-6.35-V	MRS667-6.35-V
MRA528-5.08-H	MRA528-7.62-H	MRS648-6.35-V	MRS668-6.35-V
MRA529-5.08-H	MRA529-7.62-H	MRS649-6.35-V	MRS669-6.35-V
MRA5210-5.08-H	MRA5210-7.62-H	MRS6410-6.35-V	MRS6610-6.35-V
MRA5211-5.08-H	MRA5211-7.62-H	MRS6411-6.35-V	MRS6611-6.35-V
MRA5212-5.08-H	MRA5212-7.62-H	MRS6412-6.35-V	MRS6612-6.35-V
MRA5213-5.08-H	MRA5213-7.62-H	MRS6413-6.35-V	MRS6613-6.35-V
MRA5214-5.08-H	MRA5214-7.62-H	MRS6414-6.35-V	MRS6614-6.35-V
MRA5215-5.08-H	MRA5215-7.62-H	MRS6415-6.35-V	MRS6615-6.35-V
MRA5216-5.08-H	MRA5216-7.62-H	MRS6416-6.35-V	MRS6616-6.35-V
MRA5217-5.08-H	MRA5217-7.62-H	MRS6417-6.35-V	MRS6617-6.35-V
MRA5218-5.08-H	MRA5218-7.62-H	MRS6418-6.35-V	MRS6618-6.35-V
MRA5219-5.08-H	MRA5219-7.62-H	MRS6419-6.35-V	MRS6619-6.35-V
MRA5220-5.08-H	MRA5220-7.62-H	MRS6420-6.35-V	MRS6620-6.35-V
MRA5221-5.08-H	MRA5221-7.62-H	MRS6421-6.35-V	MRS6621-6.35-V
MRA5222-5.08-H	MRA5222-7.62-H	MRS6422-6.35-V	MRS6622-6.35-V
MRA5223-5.08-H	MRA5223-7.62-H	MRS6423-6.35-V	MRS6623-6.35-V
MRA5224-5.08-H	MRA5224-7.62-H	MRS6424-6.35-V	MRS6624-6.35-V

euro-block

SERIE/PRODUCT SERIES

	MRS94-V	MDP4-FT
Passo / Pitch(mm)/ Rastermaß	9,5 mm	7,5 mm
Poli monoblocco/single mold poles/Polzahl	2÷24	1÷24
Vite / Screw / Schraube	M3	M3
Corpo isolante / Housing / Gehäuse	PA66, UL 94V0	PA66, UL 94V0
Tensione nominale/Rated Voltage/Nennspannung	450V	320V
Corrente Nominale/Rated Current/Nennstrom	32A	32A
Sezione Nominale/Wire section / Nenn querschnitt	4 mm2 26÷10 AWG	4 mm2 24÷10 AWG
Temperatura / Temperature / Temperatur	-40°C + 105°C	-40°C + 105°C
Coppia di torsione / Torque / Anzugsdrehmoment	0,5Nm (4,5 Lb in)	0,5Nm (4,5 Lb in)
Lunghezza spellatura/ Stripping lenght/ Abisolierlänge	7 mm	6 mm
VDE		
UL - cUL (file n. E342315)	30A-300V	
*Colore standard/ Standard colour/ Standardfarbe	GN(green)	GN(green)
	BK (nero - black) / GY (grigio chiaro/light grey)	BK (nero - black) / GY (grigio chiaro/light grey)

Colori a richiesta/ Colours on request/ Farben auf Anfrage
*= da non specificare sul codice di ordinazione
Do not specify on ordering code
Muss im Bestellcode nicht angegeben werden

Per evitare sbalzi tra i morsetti ed i fori sul c.s. bisogna prevedere una interruzione quando il n. di poli è superiore a 30.

To avoid loss of pitch between terminal block and pcb it is necessary to interrupt the terminal row by poles higher than 30

Die Polzahl sollte maximal 30 betragen damit das Rastermaß von PCB und Leiterplattenklemme noch übereinstimmen

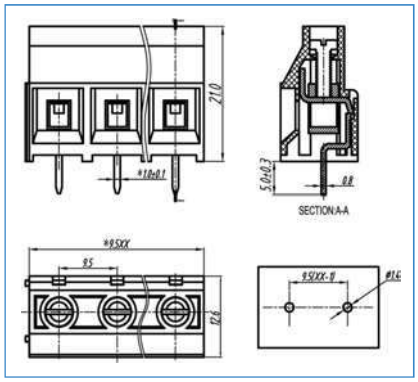

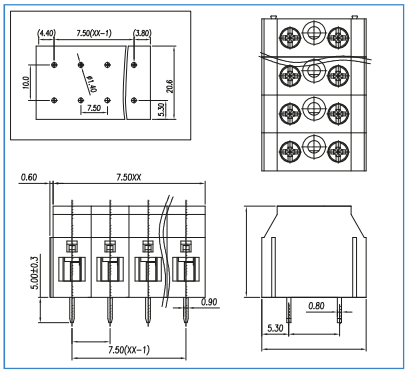

COME ORDINARE
HOW TO ORDER / BESTELLNUMMER

Series	n. poles	pitch	version	color	custom

PASSO / PITCH / RASTERMAẞ

2 POLI	MRS942-9.52-V	MDP41-7.5-FT
3 POLI	MRS943-9.52-V	MDP42-7.5-FT
	MRS944-9.52-V	MDP43-7.5-FT
	MRS945-9.52-V	MDP44-7.5-FT
	MRS946-9.52-V	MDP45-7.5-FT
	MRS947-9.52-V	MDP46-7.5-FT
	MRS948-9.52-V	MDP47-7.5-FT
	MRS949-9.52-V	MDP48-7.5-FT
	MRS9410-9.52-V	MDP49-7.5-FT
	MRS9411-9.52-V	MDP410-7.5-FT
	MRS9412-9.52-V	MDP411-7.5-FT
	MRS9413-9.52-V	MDP412-7.5-FT
	MRS9414-9.52-V	
	MRS9415-9.52-V	
	MRS9416-9.52-V	
	MRS9417-9.52-V	
	MRS9418-9.52-V	
	MRS9419-9.52-V	
	MRS9420-9.52-V	
	MRS9421-9.52-V	
	MRS9422-9.52-V	
	MRS9423-9.52-V	
24 POLI	MRS9424-9.52-V	

MRP10-V

10,16 mm
2÷24
M4
PA66, UL 94V0
750V
57A
10 mm2 26÷6 AWG
-40°C + 105°C
1,2Nm (10,5 Lb in)
11 mm
52A-300V
GN(green)
BK (nero - black) / GY (grigio chiaro/light grey)

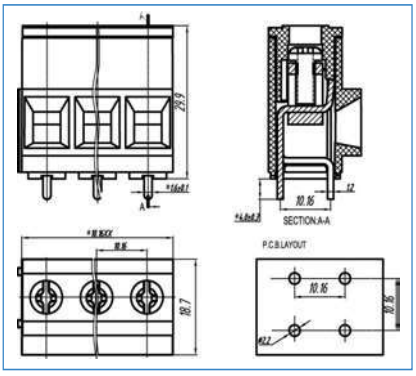

MRP30-V

15 mm
2÷24
M5
PA66, UL 94V0
1000V
125A
35 mm2 20÷2 AWG
-40°C + 105°C
2Nm (17,7 Lb in)
17 mm
115A-600V
GN(green)
BK (nero - black) / GY (grigio chiaro/light grey)

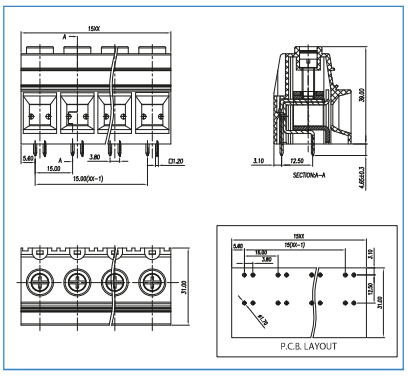

MRP30-F

15 mm
2÷22
M5
PA66, UL 94V0
1000V
125A
35 mm2 20÷2 AWG
-40°C + 105°C
2Nm (17,7 Lb in)
17 mm
115A-600V
GN(green)
BK (nero - black) / GY (grigio chiaro/light grey)

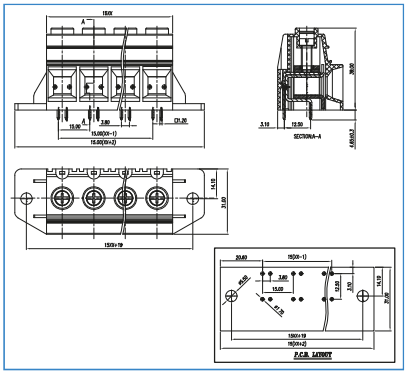

MRP102-10.16-V	MPR302-15-V	MPR302-15-F
MRP103-10.16-V	MPR303-15-V	MPR303-15-F
MRP104-10.16-V	MPR304-15-V	MPR304-15-F
MRP105-10.16-V	MPR305-15-V	MPR305-15-F
MRP106-10.16-V	MPR306-15-V	MPR306-15-F
MRP107-10.16-V	MPR307-15-V	MPR307-15-F
MRP108-10.16-V	MPR308-15-V	MPR308-15-F
MRP109-10.16-V	MPR309-15-V	MPR309-15-F
MRP1010-10.16-V	MPR3010-15-V	MPR3010-15-F
MRP1011-10.16-V	MPR3011-15-V	MPR3011-15-F
MRP1012-10.16-V	MPR3012-15-V	MPR3012-15-F
MRP1013-10.16-V		
MRP1014-10.16-V		
MRP1015-10.16-V		
MRP1016-10.16-V		
MRP1017-10.16-V		
MRP1018-10.16-V		
MRP1019-10.16-V		
MRP1020-10.16-V		
MRP1021-10.16-V		
MRP1022-10.16-V		
MRP1023-10.16-V		
MRP1024-10.16-V		

euro-block

SERIE/PRODUCT SERIES	BRI52-A4	MRI52-A3
Passo / Pitch(mm)/ Rastermaß	5 mm	5 mm
Poli monoblocco/single mold poles/Polzahl	2÷24	2÷24
Vite / Screw / Schraube	M2.5	M2.5
Corpo isolante / Housing / Gehäuse	PA66, UL 94V0	PA66, UL 94V0
Tensione nominale/Rated Voltage/Nennspannung	250V	250V
Corrente Nominale/Rated Current/Nennstrom	24A	24A
Sezione Nominale/Wire section / Nenn querschnitt	2,5 mm2 22÷14 AWG	2,5 mm2 26÷14 AWG
Temperatura / Temperature / Temperatur	-40°C + 105°C	-40°C + 105°C
Coppia di torsione / Torque / Anzugsdrehmoment	0,4Nm (3,6 Lb in)	0,4Nm (3,6 Lb in)
Lunghezza spellatura/ Stripping lenght/ Abisolierlänge	7 mm	7 mm
VDE		
UL - cUL (file n. E342315)		10A-300V
*Colore standard/ Standard colour/ Standardfarbe	GN(green)	GN(green)
	BK (nero - black) / GY (grigio chiaro/light grey)	BK (nero - black) / GY (grigio chiaro/light grey)

Colori a richiesta/ Colours on request/ Farben auf Anfrage
*= da non specificare sul codice di ordinazione
Do not specify on ordering code
Muss im Bestellcode nicht angegeben werden

Per evitare sbalzi tra i morsetti ed i fori sul c.s. bisogna prevedere una interruzione quando il n. di poli è superiore a 30.

To avoid loss of pitch between terminal block and pcb it is necessary to interrupt the terminal row by poles higher than 30

Die Polzahl sollte maximal 30 betragen damit das Rastermaß von PCB und Leiterplattenklemme noch übereinstimmen

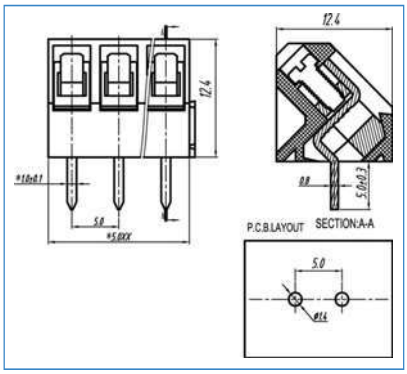

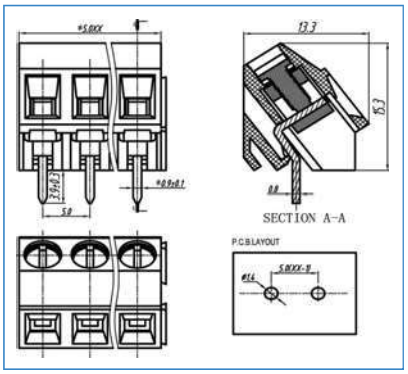

COME ORDINARE
HOW TO ORDER / BESTELLNUMMER

Series	n. poles	pitch	version	color	custom

PASSO / PITCH / RASTERMAß

2 POLI	BRI522-5-A4	MRI522-5-A3
3 POLI	BRI523-5-A4	MRI523-5-A3
	BRI524-5-A4	MRI524-5-A3
	BRI525-5-A4	MRI525-5-A3
	BRI526-5-A4	MRI526-5-A3
	BRI527-5-A4	MRI527-5-A3
	BRI528-5-A4	MRI528-5-A3
	BRI529-5-A4	MRI529-5-A3
	BRI5210-5-A4	MRI5210-5-A3
	BRI5211-5-A4	MRI5211-5-A3
	BRI5212-5-A4	MRI5212-5-A3
	BRI5213-5-A4	MRI5213-5-A3
	BRI5214-5-A4	MRI5214-5-A3
	BRI5215-5-A4	MRI5215-5-A3
	BRI5216-5-A4	MRI5216-5-A3
	BRI5217-5-A4	MRI5217-5-A3
	BRI5218-5-A4	MRI5218-5-A3
	BRI5219-5-A4	MRI5219-5-A3
	BRI5220-5-A4	MRI5220-5-A3
	BRI5221-5-A4	MRI5221-5-A3
	BRI5222-5-A4	MRI5222-5-A3
	BRI5223-5-A4	MRI5223-5-A3
24 POLI	BRI5224-5-A4	MRI5224-5-A3

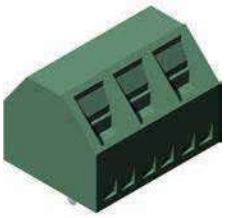

SRI52-A4	MRF52-V	MRF52-H
5,08 mm	5 mm	5 mm
2÷24	1÷...	1÷...
M2.5	M2.5	M2.5
PA66, UL 94V0	PA66, UL 94V0	PA66, UL 94V0
250V	450V	450V
17,5A	24A	24A
1,5 mm2 22÷16 AWG	2,5 mm2 24÷12 AWG	2,5 mm2 24÷12 AWG
-40°C + 105°C	-40°C + 105°C	-40°C + 105°C
0,4Nm (3,6 Lb in)	0,4Nm (3,6 Lb in)	0,4Nm (3,6 Lb in)
7 mm	12 mm	12 mm
15A-300V	20A-300V	20A-300V
GN(green)	GN(green)	GN(green)
BK (nero - black) / GY (grigio chiaro/light grey)	BK (nero - black) / GY (grigio chiaro/light grey)	BK (nero - black) / GY (grigio chiaro/light grey)

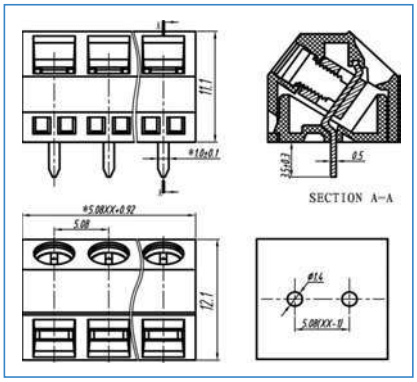

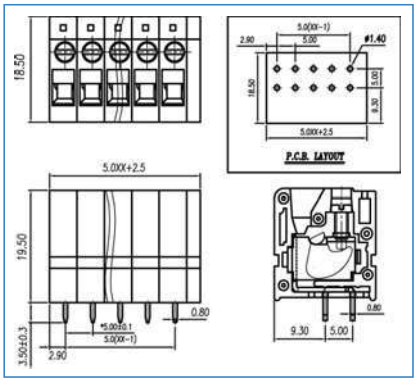

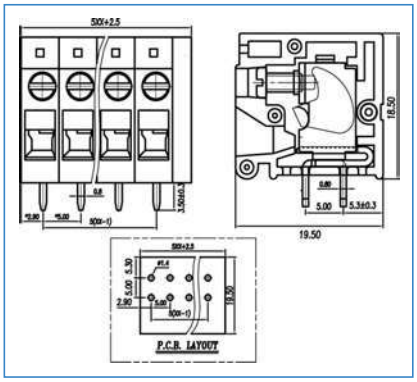

SRI522-5.08-A4	MRF521-5-V	MRF521-5-H
SRI523-5.08-A4	MRF522-5-V	MRF522-5-H
SRI524-5.08-A4		
SRI525-5.08-A4		
SRI526-5.08-A4		
SRI527-5.08-A4		
SRI528-5.08-A4		
SRI529-5.08-A4		
SRI5210-5.08-A4		
SRI5211-5.08-A4		
SRI5212-5.08-A4		
SRI5213-5.08-A4		
SRI5214-5.08-A4		
SRI5215-5.08-A4		
SRI5216-5.08-A4		
SRI5217-5.08-A4		
SRI5218-5.08-A4		
SRI5219-5.08-A4		
SRI5220-5.08-A4		
SRI5221-5.08-A4		
SRI5222-5.08-A4		
SRI5223-5.08-A4		
SRI5224-5.08-A4	MRF5223-5-V	MRF5223-5-H

euro-block

SERIE/PRODUCT SERIES	MRF52-H1	MRF52-V1
Passo / Pitch(mm)/ Rastermaß	5 mm	5 mm
Poli monoblocco/single mold poles/Polzahl	1÷...	1÷...
Vite / Screw / Schraube	M2.5	M2.5
Corpo isolante / Housing / Gehäuse	PA66, UL 94V0	PA66, UL 94V0
Tensione nominale/Rated Voltage/Nennspannung	450V	450V
Corrente Nominale/Rated Current/Nennstrom	24A	24A
Sezione Nominale/Wire section / Nenn querschnitt	2,5 mm2 24÷12 AWG	2,5 mm2 24÷12 AWG
Temperatura / Temperature / Temperatur	-40°C + 105°C	-40°C + 105°C
Coppia di torsione / Torque / Anzugsdrehmoment	0,4Nm (3,6 Lb in)	0,4Nm (3,6 Lb in)
Lunghezza spellatura/ Stripping lenght/ Abisolierlänge	12 mm	12 mm
VDE		
UL - cUL (file n. E342315)	20A-300V	20A-300V
*Colore standard/ Standard colour/ Standardfarbe	GN(green)	GN(green)
	BK (nero - black) / GY (grigio chiaro/light grey)	BK (nero - black) / GY (grigio chiaro/light grey)

Colori a richiesta/ Colours on request/ Farben auf Anfrage
*= da non specificare sul codice di ordinazione
Do not specify on ordering code
Muss im Bestellcode nicht angegeben werden

Per evitare sbalzi tra i morsetti ed i fori sul c.s. bisogna prevedere una interruzione quando il n. di poli è superiore a 30.

To avoid loss of pitch between terminal block and pcb it is necessary to interrupt the terminal row by poles higher than 30

Die Polzahl sollte maximal 30 betragen damit das Rastermaß von PCB und Leiterplattenklemme noch übereinstimmen

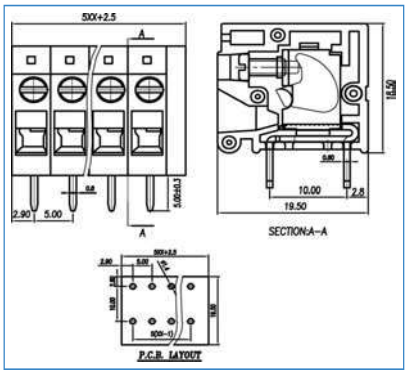

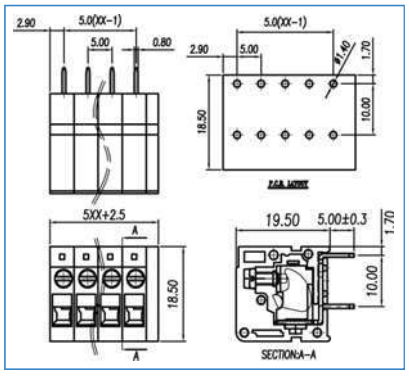

COME ORDINARE
HOW TO ORDER / BESTELLNUMMER

Series	n. poles	pitch	version	color	custom

PASSO / PITCH / RASTERMAß		
2 POLI	MRF521-5-H1	MRF521-5-V1
3 POLI	MRF522-5-H1	MRF522-5-V1
24 POLI	MRF5223-5-H1	MRF5223-5-V1

Morsettiere a molla
Spring terminal blocks

euro-block

SERIE/PRODUCT SERIES

	MRM1-V	MRM1-V1
Passo / Pitch(mm)/ Rastermaß	2,5 mm	2,5 mm
Poli monoblocco/single mold poles/Polzahl	1÷...	1÷...
Vite / Screw / Schraube		
Corpo isolante / Housing / Gehäuse	PA66, UL 94V0	PA66, UL 94V0
Tensione nominale/Rated Voltage/Nennspannung	250V	250V
Corrente Nominale/Rated Current/Nennstrom	6A	6A
Sezione Nominale/Wire section / Nenn querschnitt	0,5 mm2 28÷20 AWG	0,5 mm2 28÷20 AWG
Temperatura / Temperature / Temperatur	-40°C + 105°C	-40°C + 105°C
Coppia di torsione / Torque / Anzugsdrehmoment		
Lunghezza spellatura/ Stripping lenght/ Abisolierlänge	9 mm	9 mm
VDE		
UL - cUL (file n. E342315)	4A-300V	4A-300V
*Colore standard/ Standard colour/ Standardfarbe	GY(grey)	GY(grey)
Colori a richiesta/ Colours on request/ Farben auf Anfrage		

*= da non specificare sul codice di ordinazione
Do not specify on ordering code
Muss im Bestellcode nicht angegeben werden

Per evitare sbalzi tra i morsetti ed i fori sul c.s. bisogna prevedere una interruzione quando il n. di poli è superiore a 30.

To avoid loss of pitch between terminal block and pcb it is necessary to interrupt the terminal row by poles higher than 30

Die Polzahl sollte maximal 30 betragen damit das Rastermaß von PCB und Leiterplattenklemme noch übereinstimmen

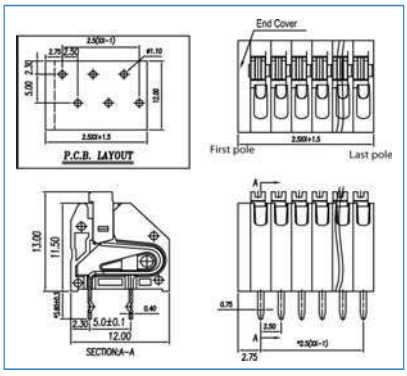

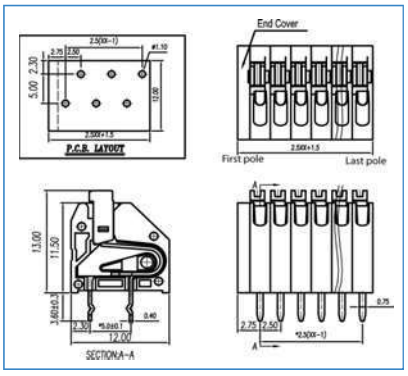

COME ORDINARE
HOW TO ORDER / BESTELLNUMMER

Series	n. poles	pitch	version	color	custom

PASSO / PITCH / RASTERMAß

2 POLI	MRM11-2.5-V	MRM1-2.5-V1
3 POLI	MRM12-2.5-V	MRM12-2.5-V1
24 POLI	MRM123-2.5-V	MRM123-2.5-V1

MRM1-VA

2,5 mm
1÷...
PA66, UL 94V0
250V
6A
0,5 mm2 28÷20 AWG
-40°C + 105°C
9 mm
4A-300V
GY(grey)

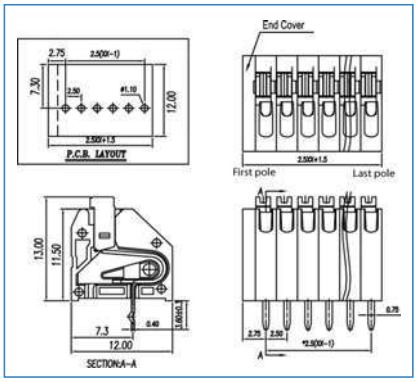

MRM1-2.5-VA

MRM12-2.5-VA

MRM123-2.5-VA

MRM1-VP

2,5 mm
1÷...
PA66, UL 94V0
250V
6A
0,5 mm2 28÷20 AWG
-40°C + 105°C
9 mm
4A-300V
GY(grey)

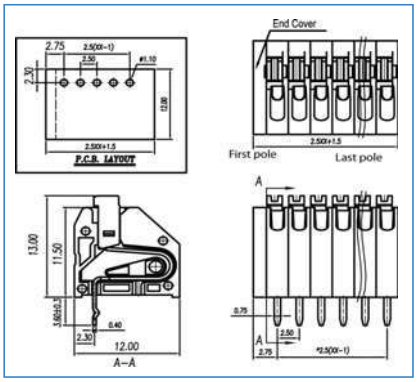

MRM1-2.5-VP

MRM12-2.5-VP

MRM123-5-H

MRM1-V

3,5 mm
1÷...
PA66, UL 94V0
450V
8A
1,5 mm2 26÷16 AWG
-40°C + 105°C
9 mm
5A-300V
GY(grey)

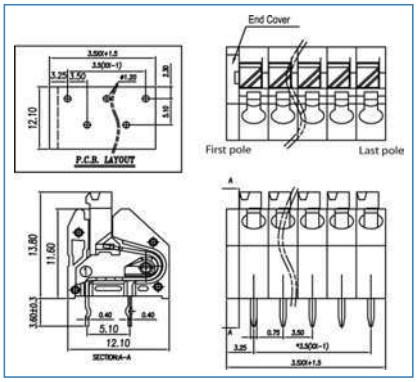

MRM11-3.5-V

MRM12-3.5-V

MRM123-3.5-V

euro-block

SERIE/PRODUCT SERIES

	MRM1-V1	MRM1-VA
Passo / Pitch(mm)/ Rastermaß	3,5 mm	3,5 mm
Poli monoblocco/single mold poles/Polzahl	1÷...	1÷...
Vite / Screw / Schraube		
Corpo isolante / Housing / Gehäuse	PA66, UL 94V0	PA66, UL 94V0
Tensione nominale/Rated Voltage/Nennspannung	450V	450V
Corrente Nominale/Rated Current/Nennstrom	8A	8A
Sezione Nominale/Wire section / Nenn querschnitt	1,5 mm2 26÷16 AWG	1,5 mm2 26÷16 AWG
Temperatura / Temperature / Temperatur	-40°C + 105°C	-40°C + 105°C
Coppia di torsione / Torque / Anzugsdrehmoment		
Lunghezza spellatura/ Stripping lenght/ Abisolierlänge	9 mm	9 mm
VDE		
UL - cUL (file n. E342315)	5A-300V	5A-300V
*Colore standard/ Standard colour/ Standardfarbe	GY(grey)	GY(grey)
Colori a richiesta/ Colours on request/ Farben auf Anfrage		

*= da non specificare sul codice di ordinazione
Do not specify on ordering code
Muss im Bestellcode nicht angegeben werden

Per evitare sbalzi tra i morsetti ed i fori sul c.s. bisogna prevedere una interruzione quando il n. di poli è superiore a 30.

To avoid loss of pitch between terminal block and pcb it is necessary to interrupt the terminal row by poles higher than 30

Die Polzahl sollte maximal 30 betragen damit das Rastermaß von PCB und Leiterplattenklemme noch übereinstimmen

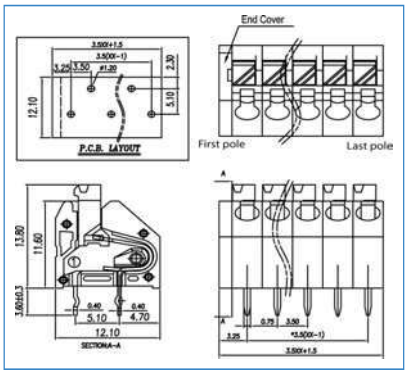

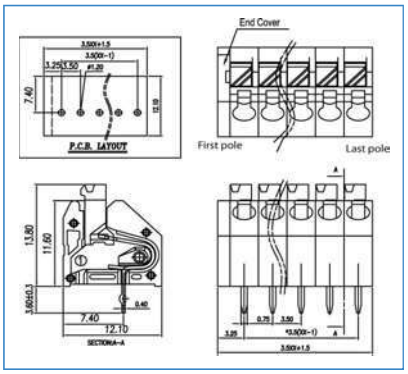

COME ORDINARE
HOW TO ORDER / BESTELLNUMMER

Series	n. poles	pitch	version	color	custom

PASSO / PITCH / RASTERMAß

2 POLI	MRM1-3.5-V1	MRM1-3.5-VA
3 POLI	MRM12-3.5-V1	MRM12-3.5-VA
24 POLI	MRM123-2.5-V1	MRM123-3.5-VA

MRM1-VP

MRM2-V

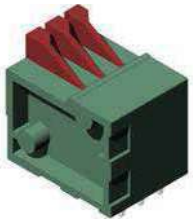

MRM2-H

MRM1-VP	MRM2-V	MRM2-H
3,5 mm	2,54 mm	2,54 mm
1÷...	1÷...	1÷...
PA66, UL 94V0	PA66, UL 94V0	PA66, UL 94V0
450V	130V	130V
8A	6A	6A
1,5 mm2 26÷16 AWG	1,0 mm2 26÷18 AWG	1,0 mm2 26÷18 AWG
-40°C + 105°C	-40°C + 105°C	-40°C + 105°C
9 mm	9 mm	9 mm
5A-300V		
GY(grey)	GN(green)	GN(green)

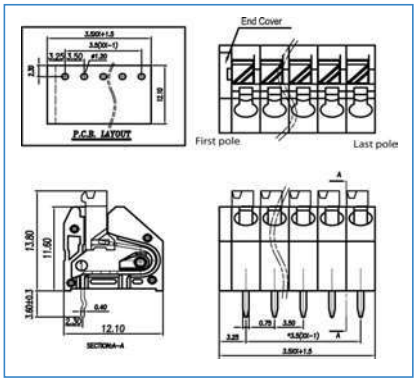

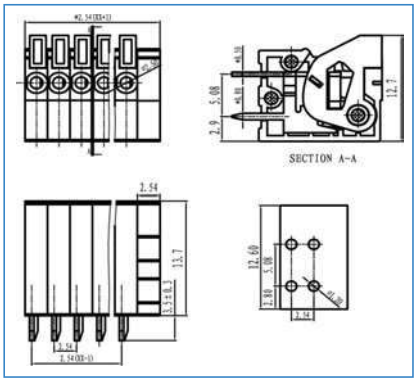

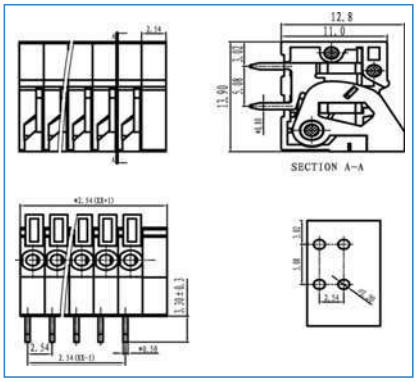

MRM1-3.5-VP	MRM21-2.54-V	MRM21-2.54-H
MRM12-3.5-VP	MRM22-2.54-V	MRM22-2.54-H
MRM123-3.5-VP	MRM223-2.54-V	MRM223-2.54-H

euro-block

SERIE/PRODUCT SERIES	MRM8-V	MRM8-H
Passo / Pitch(mm)/ Rastermaß	2,54 mm	2,54 mm
Poli monoblocco/single mold poles/Polzahl	1÷...	1÷...
Vite / Screw / Schraube		
Corpo isolante / Housing / Gehäuse	PA66, UL 94V0	PA66, UL 94V0
Tensione nominale/Rated Voltage/Nennspannung	130V	130V
Corrente Nominale/Rated Current/Nennstrom	6A	6A
Sezione Nominale/Wire section / Nenn querschnitt	1,0 mm2 26÷18 AWG	1,0 mm2 26÷18 AWG
Temperatura / Temperature / Temperatur	-40°C + 105°C	-40°C + 105°C
Coppia di torsione / Torque / Anzugsdrehmoment		
Lunghezza spellatura/ Stripping lenght/ Abisolierlänge	9 mm	9 mm
VDE		
UL - cUL (file n. E342315)	5A-150V	5A-150V
*Colore standard/ Standard colour/ Standardfarbe	GY(grey)	GY(grey)
Colori a richiesta/ Colours on request/ Farben auf Anfrage		

*= da non specificare sul codice di ordinazione
Do not specify on ordering code
Muss im Bestellcode nicht angegeben werden

Per evitare sbalzi tra i morsetti ed i fori sul c.s. bisogna prevedere una interruzione quando il n. di poli è superiore a 30.

To avoid loss of pitch between terminal block and pcb it is necessary to interrupt the terminal row by poles higher than 30

Die Polzahl sollte maximal 30 betragen damit das Rastermaß von PCB und Leiterplattenklemme noch übereinstimmen

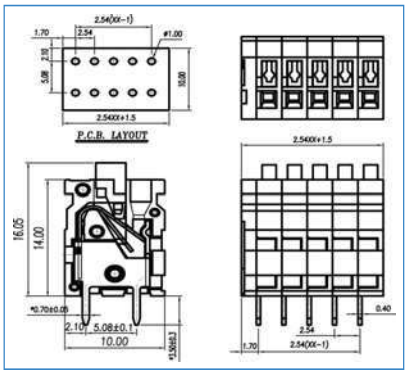

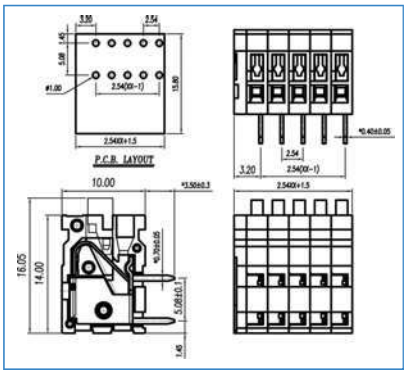

COME ORDINARE
HOW TO ORDER / BESTELLNUMMER

Series	n. poles	pitch	version	color	custom

PASSO / PITCH / RASTERMAß		
2 POLI	MRM81-2.54-V	MRM81-2.54-H
3 POLI	MRM82-2.54-V	MRM82-2.54-H
24 POLI	MRM823-2.54-V	MRM823-2.54-H

MRM8-V

5 mm
1÷...
PA66, UL 94V0
250V
15A
1,5 mm2 26÷16 AWG
-40°C + 105°C
8 mm
10A-300V
GY(grey)

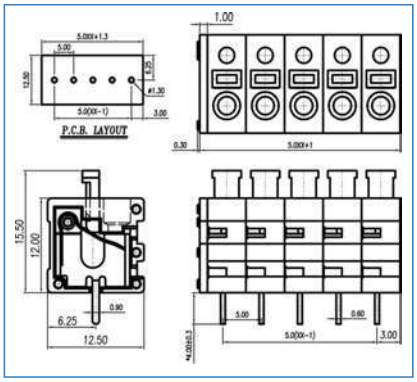

MRM81-5-V
MRM82-5-V

MRM823-5-V

MRM8-H

5 mm
1÷...
PA66, UL 94V0
250V
15A
1,5 mm2 26÷16 AWG
-40°C + 105°C
8 mm
10A-300V
GY(grey)

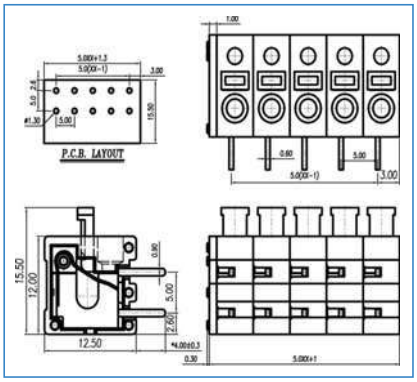

MRM81-5-H
MRM82-5-H

MRM823-5-H

MRM5-P

5 mm
1÷...
PA66, UL 94V0
450V
15A
1,5 mm2 26÷16 AWG
-40°C + 105°C
5 mm
15A-300V
GY(grey)

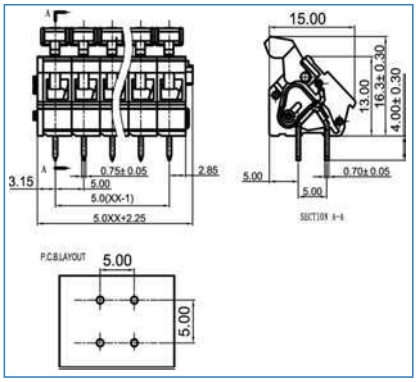

MRM51-5-P
MRM52-5-P

MRM523-5-P

euro-block

SERIE/PRODUCT SERIES

	MRM6-V		MRM6-V	
Passo / Pitch(mm)/ Rastermaß	5 mm	5,08 mm	7,5 mm	7,62 mm
Poli monoblocco/single mold poles/Polzahl	1÷...		1÷...	
Vite / Screw / Schraube				
Corpo isolante / Housing / Gehäuse	PA66, UL 94V0		PA66, UL 94V0	
Tensione nominale/Rated Voltage/Nennspannung	450V		450V	
Corrente Nominale/Rated Current/Nennstrom	15A		15A	
Sezione Nominale/Wire section / Nenn querschnitt	1,5 mm2 26÷16 AWG		1,5 mm2 26÷16 AWG	
Temperatura / Temperature / Temperatur	-40°C + 105°C		-40°C + 105°C	
Coppia di torsione / Torque / Anzugsdrehmoment				
Lunghezza spellatura/ Stripping lenght/ Abisolierlänge	5 mm		5 mm	
VDE				
UL - cUL (file n. E342315)	15A-300V		15A-300V	
*Colore standard/ Standard colour/ Standardfarbe	GY(grey)		GY(grey)	
	BK (nero - black) / GY (grigio chiaro/light grey)		BK (nero - black) / GY (grigio chiaro/light grey)	

Colori a richiesta/ Colours on request/ Farben auf Anfrage
*= da non specificare sul codice di ordinazione
Do not specify on ordering code
Muss im Bestellcode nicht angegeben werden

Per evitare sbalzi tra i morsetti ed i fori sul c.s. bisogna prevedere una interruzione quando il n. di poli è superiore a 30.

To avoid loss of pitch between terminal block and pcb it is necessary to interrupt the terminal row by poles higher than 30

Die Polzahl sollte maximal 30 betragen damit das Rastermaß von PCB und Leiterplattenklemme noch übereinstimmen

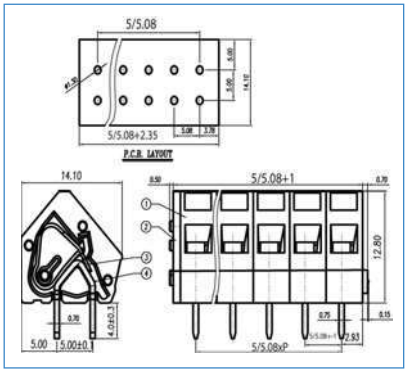

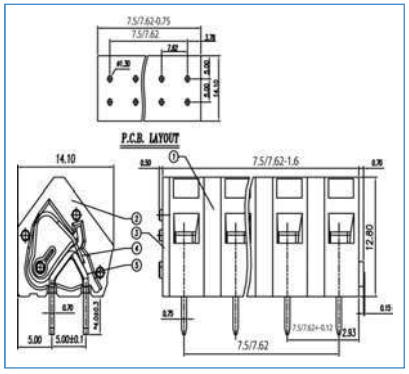

COME ORDINARE
HOW TO ORDER / BESTELLNUMMER

Series	n. poles	pitch	version	color	custom

PASSO / PITCH / RASTERMAß

2 POLI	MRM61-5-V	MRM61-5.08-V	MRM61-7.5-V	MRM61-7.62-V
3 POLI	MRM62-5-V	MRM62-5.08-V	MRM62-7.5-V	MRM62-7.62-V
24 POLI	MRM623-5-V	MRM623-5.08-V	MRM623-7.5-V	MRM623-7.62-V

Morsettiere pluripiano

Multi deck terminal blocks

euro-block

SERIE/PRODUCT SERIES	MRH31-V		MRD31-R	
Passo / Pitch(mm)/ Rastermaß	3,5 mm	3,81 mm	3,5 mm	3,81 mm
Poli monoblocco/single mold poles/Polzahl	2÷24		2+2÷24+24	
Vite / Screw / Schraube	M2.0		M2.0	
Corpo isolante / Housing / Gehäuse	PA66, UL 94V0		PA66, UL 94V0	
Tensione nominale/Rated Voltage/Nennspannung	250V		250V	
Corrente Nominale/Rated Current/Nennstrom	15A		15A	
Sezione Nominale/Wire section / Nenn querschnitt	1,5 mm2 30÷16 AWG		1,5 mm2 30÷16 AWG	
Temperatura / Temperature / Temperatur	-40°C + 105°C		-40°C + 105°C	
Coppia di torsione / Torque / Anzugsdrehmoment	0,2Nm (1,8 Lb in)		0,2Nm (1,8 Lb in)	
Lunghezza spellatura/ Stripping lenght/ Abisolierlänge	6 mm		6 mm	
VDE				
UL - cUL (file n. E342315)	15A-300V		15A-300V	
*Colore standard/ Standard colour/ Standardfarbe	GN(green)		GN(green)	
	BK (nero - black) / GY (grigio chiaro/light grey)		BK (nero - black) / GY (grigio chiaro/light grey)	

Colori a richiesta/ Colours on request/ Farben auf Anfrage
*= da non specificare sul codice di ordinazione
Do not specify on ordering code
Muss im Bestellcode nicht angegeben werden

Per evitare sbalzi tra i morsetti ed i fori sul c.s. bisogna prevedere una interruzione quando il n. di poli è superiore a 30.

To avoid loss of pitch between terminal block and pcb it is necessary to interrupt the terminal row by poles higher than 30

Die Polzahl sollte maximal 30 betragen damit das Rastermaß von PCB und Leiterplattenklemme noch übereinstimmen

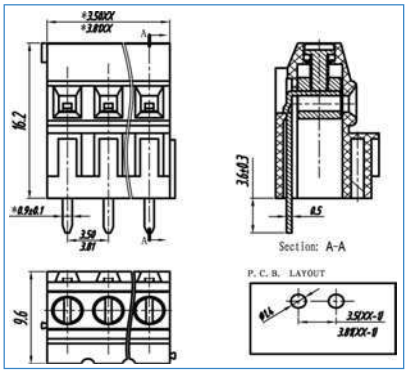

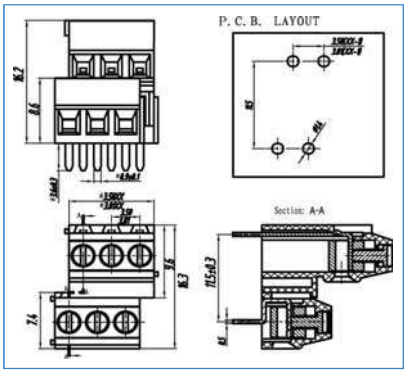

COME ORDINARE
HOW TO ORDER / BESTELLNUMMER

Series	n. poles	pitch	version	color	custom

PASSO / PITCH / RASTERMAß

2 POLI	MRH312-3.5-V	MRH312-3.81-V	MRD312-3.5-R	MRD312-3.81-R
3 POLI	MRH313-3.5-V	MRH313-3.81-V	MRD313-3.5-R	MRD313-3.81-R
	MRH314-3.5-V	MRH314-3.81-V	MRD314-3.5-R	MRD314-3.81-R
	MRH315-3.5-V	MRH315-3.81-V	MRD315-3.5-R	MRD315-3.81-R
	MRH316-3.5-V	MRH316-3.81-V	MRD316-3.5-R	MRD316-3.81-R
	MRH317-3.5-V	MRH317-3.81-V	MRD317-3.5-R	MRD317-3.81-R
	MRH318-3.5-V	MRH318-3.81-V	MRD318-3.5-R	MRD318-3.81-R
	MRH319-3.5-V	MRH319-3.81-V	MRD319-3.5-R	MRD319-3.81-R
	MRH3110-3.5-V	MRH3110-3.81-V	MRD3110-3.5-R	MRD3110-3.81-R
	MRH3111-3.5-V	MRH3111-3.81-V	MRD3111-3.5-R	MRD3111-3.81-R
	MRH3112-3.5-V	MRH3112-3.81-V	MRD3112-3.5-R	MRD3112-3.81-R
	MRH3113-3.5-V	MRH3113-3.81-V	MRD3113-3.5-R	MRD3113-3.81-R
	MRH3114-3.5-V	MRH3114-3.81-V	MRD3114-3.5-R	MRD3114-3.81-R
	MRH3115-3.5-V	MRH3115-3.81-V	MRD3115-3.5-R	MRD3115-3.81-R
	MRH3116-3.5-V	MRH3116-3.81-V	MRD3116-3.5-R	MRD3116-3.81-R
	MRH3117-3.5-V	MRH3117-3.81-V	MRD3117-3.5-R	MRD3117-3.81-R
	MRH3118-3.5-V	MRH3118-3.81-V	MRD3118-3.5-R	MRD3118-3.81-R
	MRH3119-3.5-V	MRH3119-3.81-V	MRD3119-3.5-R	MRD3119-3.81-R
	MRH3120-3.5-V	MRH3120-3.81-V	MRD3120-3.5-R	MRD3120-3.81-R
	MRH3121-3.5-V	MRH3121-3.81-V	MRD3121-3.5-R	MRD3121-3.81-R
	MRH3122-3.5-V	MRH3122-3.81-V	MRD3122-3.5-R	MRD3122-3.81-R
	MRH3123-3.5-V	MRH3123-3.81-V	MRD3123-3.5-R	MRD3123-3.81-R
24 POLI	MRH3124-3.5-V	MRH3124-3.81-V	MRD3124-3.5-R	MRD3124-3.81-R

MRD31-L

3,5 mm	3,81 mm
2+2÷24+24	
M2.0	
PA66, UL 94V0	
250V	
15A	
1,5 mm2 30÷16 AWG	
-40°C + 105°C	
0,2Nm (1,8 Lb in)	
6 mm	
15A-300V	
GN(green)	
BK (nero - black) / GY (grigio chiaro/light grey)	

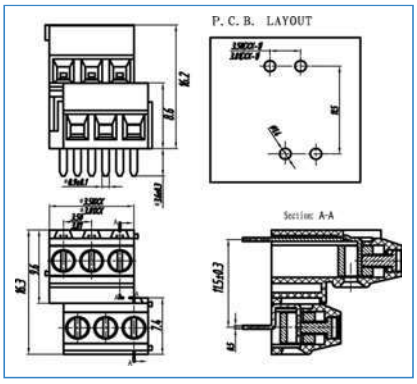

MHH52-V

5 mm / 5,08 mm
2÷24
M2.5
PA66, UL 94V0
250V
18A
2,5 mm2 30÷14 AWG
-40°C + 105°C
0,4Nm (3,6 Lb in)
7 mm
15A-300V
GN(green)
BK (nero - black) / GY (grigio chiaro/light grey)

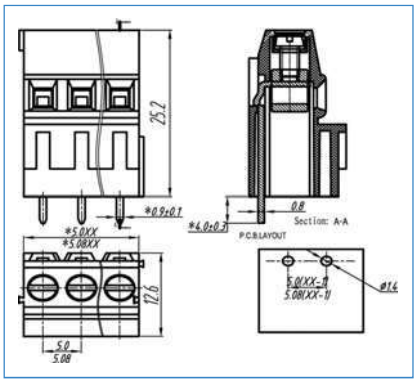

MRD51-V

5 mm
2+2÷24+24
M2.5
PA66, UL 94V0
250V
17,5A
1,5 mm2 30÷16 AWG
-40°C + 105°C
0,4Nm (3,6 Lb in)
6 mm
12A-300V
GN(green)
BK (nero - black) / GY (grigio chiaro/light grey)

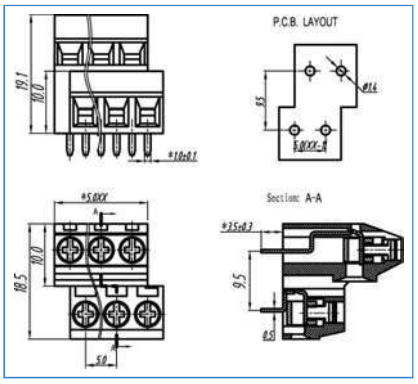

MRD312-3.5-L	MRD312-3.81-L	MHH522-5-V	MHH522-5.08-V	MRD512-5-V
MRD313-3.5-L	MRD313-3.81-L	MHH523-5-V	MHH523-5.08-V	MRD513-5-V
MRD314-3.5-L	MRD314-3.81-L	MHH524-5-V	MHH524-5.08-V	MRD514-5-V
MRD315-3.5-L	MRD315-3.81-L	MHH525-5-V	MHH525-5.08-V	MRD515-5-V
MRD316-3.5-L	MRD316-3.81-L	MHH526-5-V	MHH526-5.08-V	MRD516-5-V
MRD317-3.5-L	MRD317-3.81-L	MHH527-5-V	MHH527-5.08-V	MRD517-5-V
MRD318-3.5-L	MRD318-3.81-L	MHH528-5-V	MHH528-5.08-V	MRD518-5-V
MRD319-3.5-L	MRD319-3.81-L	MHH529-5-V	MHH529-5.08-V	MRD519-5-V
MRD3110-3.5-L	MRD3110-3.81-L	MHH5210-5-V	MHH5210-5.08-V	MRD5110-5-V
MRD3111-3.5-L	MRD3111-3.81-L	MHH5211-5-V	MHH5211-5.08-V	MRD5111-5-V
MRD3112-3.5-L	MRD3112-3.81-L	MHH5212-5-V	MHH5212-5.08-V	MRD5112-5-V
MRD3113-3.5-L	MRD3113-3.81-L	MHH5213-5-V	MHH5213-5.08-V	MRD5113-5-V
MRD3114-3.5-L	MRD3114-3.81-L	MHH5214-5-V	MHH5214-5.08-V	MRD5114-5-V
MRD3115-3.5-L	MRD3115-3.81-L	MHH5215-5-V	MHH5215-5.08-V	MRD5115-5-V
MRD3116-3.5-L	MRD3116-3.81-L	MHH5216-5-V	MHH5216-5.08-V	MRD5116-5-V
MRD3117-3.5-L	MRD3117-3.81-L	MHH5217-5-V	MHH5217-5.08-V	MRD5117-5-V
MRD3118-3.5-L	MRD3118-3.81-L	MHH5218-5-V	MHH5218-5.08-V	MRD5118-5-V
MRD3119-3.5-L	MRD3119-3.81-L	MHH5219-5-V	MHH5219-5.08-V	MRD5119-5-V
MRD3120-3.5-L	MRD3120-3.81-L	MHH5220-5-V	MHH5220-5.08-V	MRD5120-5-V
MRD3121-3.5-L	MRD3121-3.81-L	MHH5221-5-V	MHH5221-5.08-V	MRD5121-5-V
MRD3122-3.5-L	MRD3122-3.81-L	MHH5222-5-V	MHH5222-5.08-V	MRD5122-5-V
MRD3123-3.5-L	MRD3123-3.81-L	MHH5223-5-V	MHH5223-5.08-V	MRD5123-5-V
MRD3124-3.5-L	MRD3124-3.81-L	MHH5224-5-V	MHH5224-5.08-V	MRD5124-5-V

euro-block

SERIE/PRODUCT SERIES

	MRD52-R		MRD52-L	
Passo / Pitch(mm)/ Rastermaß	5 mm	5,08 mm	5 mm	5,08 mm
Poli monoblocco/single mold poles/Polzahl	2+2÷24+24		2+2÷24+24	
Vite / Screw / Schraube	M2.5		M2.5	
Corpo isolante / Housing / Gehäuse	PA66, UL 94V0		PA66, UL 94V0	
Tensione nominale/Rated Voltage/Nennspannung	250V		250V	
Corrente Nominale/Rated Current/Nennstrom	18A		18A	
Sezione Nominale/Wire section / Nenn querschnitt	2,5 mm2 30÷14 AWG		2,5 mm2 30÷14 AWG	
Temperatura / Temperature / Temperatur	-40°C + 105°C		-40°C + 105°C	
Coppia di torsione / Torque / Anzugsdrehmoment	0,4Nm (3,6 Lb in)		0,4Nm (3,6 Lb in)	
Lunghezza spellatura/ Stripping lenght/ Abisolierlänge	7 mm		7 mm	
VDE				
UL - cUL (file n. E342315)	15A-300V		15A-300V	
*Colore standard/ Standard colour/ Standardfarbe	GN(green)		GN(green)	
	BK (nero - black) / GY (grigio chiaro/light grey)		BK (nero - black) / GY (grigio chiaro/light grey)	

Colori a richiesta/ Colours on request/ Farben auf Anfrage
*= da non specificare sul codice di ordinazione
Do not specify on ordering code
Muss im Bestellcode nicht angegeben werden

Per evitare sbalzi tra i morsetti ed i fori sul c.s. bisogna prevedere una interruzione quando il n. di poli è superiore a 30.

To avoid loss of pitch between terminal block and pcb it is necessary to interrupt the terminal row by poles higher than 30

Die Polzahl sollte maximal 30 betragen damit das Rastermaß von PCB und Leiterplattenklemme noch übereinstimmen

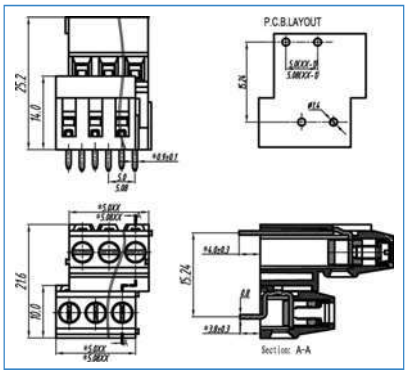

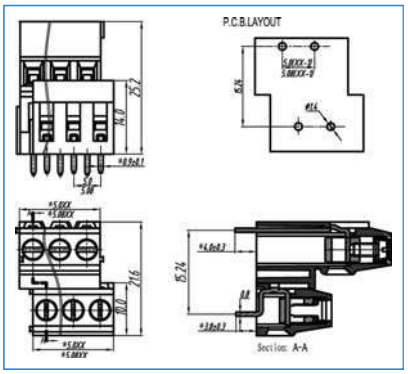

COME ORDINARE
HOW TO ORDER / BESTELLNUMMER

Series	n. poles	pitch	version	color	custom

PASSO / PITCH / RASTERMAẞ

2 POLI	MRD522-5-R	MRD522-5.08-R	MRD522-5-L	MRD522-5.08-L
3 POLI	MRD523-5-R	MRD523-5.08-R	MRD523-5-L	MRD523-5.08-L
	MRD524-5-R	MRD524-5.08-R	MRD524-5-L	MRD524-5.08-L
	MRD525-5-R	MRD525-5.08-R	MRD525-5-L	MRD525-5.08-L
	MRD526-5-R	MRD526-5.08-R	MRD526-5-L	MRD526-5.08-L
	MRD527-5-R	MRD527-5.08-R	MRD527-5-L	MRD527-5.08-L
	MRD528-5-R	MRD528-5.08-R	MRD528-5-L	MRD528-5.08-L
	MRD529-5-R	MRD529-5.08-R	MRD529-5-L	MRD529-5.08-L
	MRD5210-5-R	MRD5210-5.08-R	MRD5210-5-L	MRD5210-5.08-L
	MRD5211-5-R	MRD5211-5.08-R	MRD5211-5-L	MRD5211-5.08-L
	MRD5212-5-R	MRD5212-5.08-R	MRD5212-5-L	MRD5212-5.08-L
	MRD5213-5-R	MRD5213-5.08-R	MRD5213-5-L	MRD5213-5.08-L
	MRD5214-5-R	MRD5214-5.08-R	MRD5214-5-L	MRD5214-5.08-L
	MRD5215-5-R	MRD5215-5.08-R	MRD5215-5-L	MRD5215-5.08-L
	MRD5216-5-R	MRD5216-5.08-R	MRD5216-5-L	MRD5216-5.08-L
	MRD5217-5-R	MRD5217-5.08-R	MRD5217-5-L	MRD5217-5.08-L
	MRD5218-5-R	MRD5218-5.08-R	MRD5218-5-L	MRD5218-5.08-L
	MRD5219-5-R	MRD5219-5.08-R	MRD5219-5-L	MRD5219-5.08-L
	MRD5220-5-R	MRD5220-5.08-R	MRD5220-5-L	MRD5220-5.08-L
	MRD5221-5-R	MRD5221-5.08-R	MRD5221-5-L	MRD5221-5.08-L
	MRD5222-5-R	MRD5222-5.08-R	MRD5222-5-L	MRD5222-5.08-L
	MRD5223-5-R	MRD5223-5.08-R	MRD5223-5-L	MRD5223-5.08-L
24 POLI	MRD5224-5-R	MRD5224-5.08-R	MRD5224-5-L	MRD5224-5.08-L

MHT52-V

5 mm	5,08 mm
2÷24	
M2.5	
PA66, UL 94V0	
250V	
18A	
2,5 mm2 30÷14 AWG	
-40°C + 105°C	
0,4Nm (3,6 Lb in)	
7 mm	
15A-300V	
GN(green)	
BK (nero - black) / GY (grigio chiaro/light grey)	

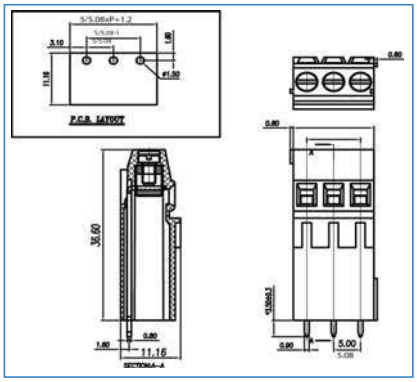

MRT52-R

5 mm	5,08 mm
2+2+2÷24+24+24	
M2.5	
PA66, UL 94V0	
250V	
18A	
2,5 mm2 30÷14 AWG	
-40°C + 105°C	
0,4Nm (3,6 Lb in)	
7 mm	
15A-300V	
GN(green)	
BK (nero - black) / GY (grigio chiaro/light grey)	

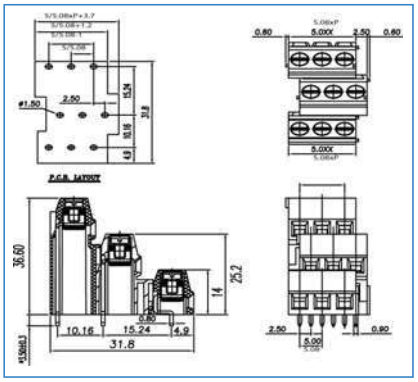

MRT52-L

5 mm	5,08 mm
2+2+2÷24+24+24	
M2.5	
PA66, UL 94V0	
250V	
18A	
2,5 mm2 30÷14 AWG	
-40°C + 105°C	
0,4Nm (3,6 Lb in)	
7 mm	
15A-300V	
GN(green)	
BK (nero - black) / GY (grigio chiaro/light grey)	

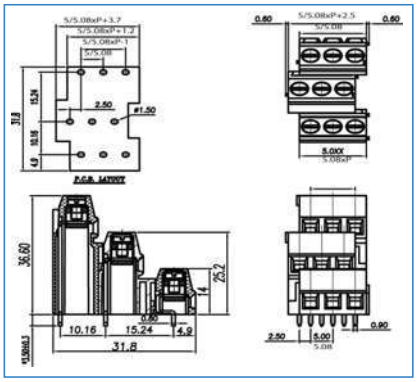

MHT522-5-V	MHT522-5.08-V	MRT522-5-R	MRT522-5.08-R	MRT522-5-L	MRT522-5.08-L
MHT523-5-V	MHT523-5.08-V	MRT523-5-R	MRT523-5.08-R	MRT523-5-L	MRT523-5.08-L
MHT524-5-V	MHT524-5.08-V	MRT524-5-R	MRT524-5.08-R	MRT524-5-L	MRT524-5.08-L
MHT525-5-V	MHT525-5.08-V	MRT525-5-R	MRT525-5.08-R	MRT525-5-L	MRT525-5.08-L
MHT526-5-V	MHT526-5.08-V	MRT526-5-R	MRT526-5.08-R	MRT526-5-L	MRT526-5.08-L
MHT527-5-V	MHT527-5.08-V	MRT527-5-R	MRT527-5.08-R	MRT527-5-L	MRT527-5.08-L
MHT528-5-V	MHT528-5.08-V	MRT528-5-R	MRT528-5.08-R	MRT528-5-L	MRT528-5.08-L
MHT529-5-V	MHT529-5.08-V	MRT529-5-R	MRT529-5.08-R	MRT529-5-L	MRT529-5.08-L
MHT5210-5-V	MHT5210-5.08-V	MRT5210-5-R	MRT5210-5.08-R	MRT5210-5-L	MRT5210-5.08-L
MHT5211-5-V	MHT5211-5.08-V	MRT5211-5-R	MRT5211-5.08-R	MRT5211-5-L	MRT5211-5.08-L
MHT5212-5-V	MHT5212-5.08-V	MRT5212-5-R	MRT5212-5.08-R	MRT5212-5-L	MRT5212-5.08-L
MHT5213-5-V	MHT5213-5.08-V	MRT5213-5-R	MRT5213-5.08-R	MRT5213-5-L	MRT5213-5.08-L
MHT5214-5-V	MHT5214-5.08-V	MRT5214-5-R	MRT5214-5.08-R	MRT5214-5-L	MRT5214-5.08-L
MHT5215-5-V	MHT5215-5.08-V	MRT5215-5-R	MRT5215-5.08-R	MRT5215-5-L	MRT5215-5.08-L
MHT5216-5-V	MHT5216-5.08-V	MRT5216-5-R	MRT5216-5.08-R	MRT5216-5-L	MRT5216-5.08-L
MHT5217-5-V	MHT5217-5.08-V	MRT5217-5-R	MRT5217-5.08-R	MRT5217-5-L	MRT5217-5.08-L
MHT5218-5-V	MHT5218-5.08-V	MRT5218-5-R	MRT5218-5.08-R	MRT5218-5-L	MRT5218-5.08-L
MHT5219-5-V	MHT5219-5.08-V	MRT5219-5-R	MRT5219-5.08-R	MRT5219-5-L	MRT5219-5.08-L
MHT5220-5-V	MHT5220-5.08-V	MRT5220-5-R	MRT5220-5.08-R	MRT5220-5-L	MRT5220-5.08-L
MHT5221-5-V	MHT5221-5.08-V	MRT5221-5-R	MRT5221-5.08-R	MRT5221-5-L	MRT5221-5.08-L
MHT5222-5-V	MHT5222-5.08-V	MRT5222-5-R	MRT5222-5.08-R	MRT5222-5-L	MRT5222-5.08-L
MHT5223-5-V	MHT5223-5.08-V	MRT5223-5-R	MRT5223-5.08-R	MRT5223-5-L	MRT5223-5.08-L
MHT5224-5-V	MHT5224-5.08-V	MRT5224-5-R	MRT5224-5.08-R	MRT5224-5-L	MRT5224-5.08-L

Connettori
Connectors

PRODUCT CROSS SHEET

PITCH 2.5 - 3.81

series		CLF	CCM-CV(CH)	CCM-CV(CH)	CCM-V(H)F	CMA-(H)	CMA-(H)F	CRS-F	CMK	MDL-V(H)	MDL-V(H)	MDL-VF(HF)	CMD-V(H)	CMD-VF(HF)
	pitch	5	2.5	3.5/3.81	3.5/3.81	3.81	3.81	3.81	3.81	2.5	3.5/3.81	3.5/3.81	3.5/3.81	3.5/3.81
CLM	5	■												
CFS	2.5		■							■				
CRF	3.5/3.81			■							■		■	
CRV-R(L)	3.5/3.81			■							■		■	
CRF-F	3.5/3.81				■							■		
CRV-RF(LF)	3.5/3.81				■							■		
CFF	3.81			■							■		■	
CFF-F	3.81				■							■		■
CFSC	3.5			■							■		■	
CFSC-F	3.5				■							■		■
CFSC-EJ	3.5			■							■		■	
CFS	3.5/3.81			■							■		■	
CFS-F	3.5/3.81				■							■		■
CRS	3.81					■								
CRS-F	3.81						■		■					
CRS-G	3.81							■						

PRODUCT CROSS SHEET

PITCH 5 - 7.62

series		CCM-V(H)CV(CH)	CCM-V(H)CV(CH)	CCM-V(H)F	CCM-V(H)F	CMA-(H)	CMA-(H)F	CMI-C	CMI-F	CM5-V(H)	CRS-F	CMK	MDL-V(H)	MDL-VF(HF)	CMD-V(H)	CMD-VF(HF)
	pitch	5/5.08	7.5/7.62	5/5.08	7.5/7.62	5/5.08	5/5.08	5.08	5.08	5.08	5.08	5.08	5/5.08	5/5.08	5/5.08	5/5.08
CRF	5/5.08	■						■					■		■	
CRV-R(L)	5/5.08	■						■					■		■	
CRF-F	5/5.08			■					■					■		■
CRV-RF(LF)	5/5.08			■					■					■		■
CFF	5.08	■						■					■		■	
CFF-F	5.08			■					■					■		■
CFS	5.08	■						■					■		■	
CFS-F	5.08			■					■					■		■
CFS-EJ	5.08	■						■					■		■	
CRF-L	5/5.08	■						■					■		■	
CRI	5.08	■						■					■		■	
CRI-F	5.08			■					■					■		■
CRS	5.08					■										
CRS-F	5.08						■					■				
CRS-G	5.08										■					
CF5	5.08									■						
CRF	7.5/7.62		■													
CRV-R(L)	7.5/7.62		■													
CRF-F	7.5/7.62				■											
CRV-RF(LF)	7.5/7.62				■											

euro-block

SERIE/PRODUCT SERIES	CLF-3.5	CLM-3.5
Passo / Pitch(mm)/ Rastermaß	3,5 mm	3,5 mm
Poli monoblocco/single mold poles/Polzahl	2÷24	2÷24
Vite / Screw / Schraube	M2	
Corpo isolante / Housing / Gehäuse	PA66, UL 94V0	PA66, UL 94V0
Tensione nominale/Rated Voltage/Nennspannung	250V	250V
Corrente Nominale/Rated Current/Nennstrom	8A	8A
Sezione Nominale/Wire section / Nenn querschnitt	1 mm2 28÷16 AWG	
Temperatura / Temperature / Temperatur	-40°C + 105°C	-40°C + 105°C
Coppia di torsione / Torque / Anzugsdrehmoment	0,2Nm (1,7 Lb in)	
Lunghezza spellatura/ Stripping lenght/ Abisolierlänge	5 mm	
VDE		
UL - cUL (file n. E342315)		
*Colore standard/ Standard colour/ Standardfarbe	BK(black)	BK(black)

Colori a richiesta/ Colours on request/ Farben auf Anfrage
*= da non specificare sul codice di ordinazione
Do not specify on ordering code
Muss im Bestellcode nicht angegeben werden

Per evitare sbalzi tra i morsetti ed i fori sul c.s. bisogna prevedere una interruzione quando il n. di poli è superiore a 30.

To avoid loss of pitch between terminal block and pcb it is necessary to interrupt the terminal row by poles higher than 30

Die Polzahl sollte maximal 30 betragen damit das Rastermaß von PCB und Leiterplattenklemme noch übereinstimmen

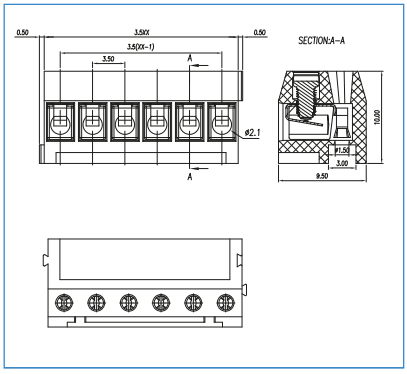

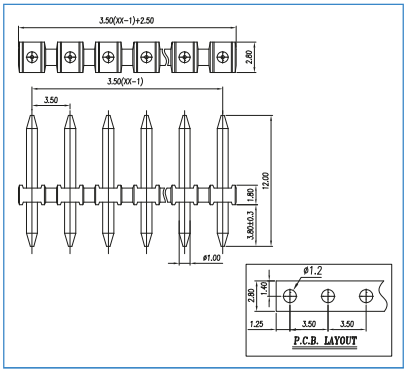

COME ORDINARE
HOW TO ORDER / BESTELLNUMMER

Series	n. poles	pitch	version	color	custom

PASSO / PITCH / RASTERMAẞ		
2 POLI	CLF02-3.5	CLM02-3.5
3 POLI	CLF03-3.5	CLM03-3.5
	CLF04-3.5	CLM04-3.5
	CLF05-3.5	CLM05-3.5
	CLF06-3.5	CLM06-3.5
	CLF07-3.5	CLM07-3.5
	CLF08-3.5	CLM08-3.5
	CLF09-3.5	CLM09-3.5
	CLF10-3.5	CLM10-3.5
	CLF11-3.5	CLM11-3.5
	CLF12-3.5	CLM12-3.5
	CLF13-3.5	CLM13-3.5
	CLF14-3.5	CLM14-3.5
	CLF15-3.5	CLM15-3.5
	CLF16-3.5	CLM16-3.5
	CLF17-3.5	CLM17-3.5
	CLF18-3.5	CLM18-3.5
	CLF19-3.5	CLM19-3.5
	CLF20-3.5	CLM20-3.5
	CLF21-3.5	CLM21-3.5
	CLF22-3.5	CLM22-3.5
	CLF23-3.5	CLM23-3.5
24 POLI	CLF24-3.5	CLM24-3.5

CLF

5 mm
2÷24
M2.5
PBT, UL 94V0
250V
17,5A
1,5 mm2 28÷16 AWG
-30°C + 120°C
0,4Nm (3,6 Lb in)
5 mm
10A-300V
BK(black)

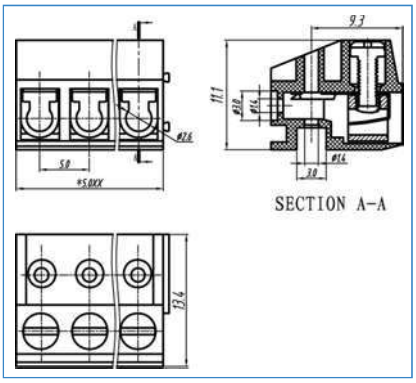

CLF-CR

5 mm
2÷24
M2.5
PA66, UL 94V0
250V
17,5A
1,5 mm2 22÷16 AWG
-40°C + 105°C
0,4Nm (3,6 Lb in)
6 mm
10A-300V
BK(black)

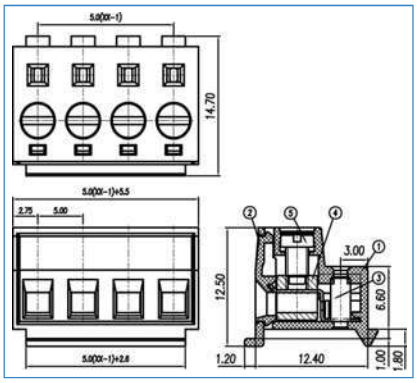

CLM

5 mm
2÷24
PBT, UL 94V0
250V
17,5A
-30°C + 120°C
10A-300V
BK(black)

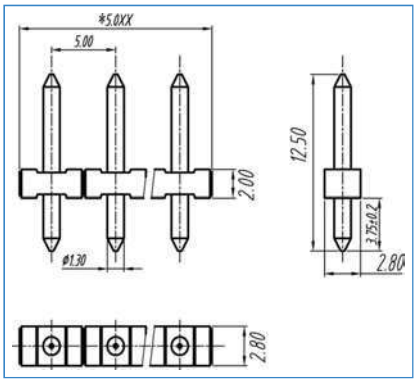

CLF02-5	CLF02-5-CR	CLM02-5
CLF03-5	CLF03-5-CR	CLM03-5
CLF04-5	CLF04-5-CR	CLM04-5
CLF05-5	CLF05-5-CR	CLM05-5
CLF06-5	CLF06-5-CR	CLM06-5
CLF07-5	CLF07-5-CR	CLM07-5
CLF08-5	CLF08-5-CR	CLM08-5
CLF09-5	CLF09-5-CR	CLM09-5
CLF10-5	CLF10-5-CR	CLM10-5
CLF11-5	CLF11-5-CR	CLM11-5
CLF12-5	CLF12-5-CR	CLM12-5
CLF13-5	CLF13-5-CR	CLM13-5
CLF14-5	CLF14-5-CR	CLM14-5
CLF15-5	CLF15-5-CR	CLM15-5
CLF16-5	CLF16-5-CR	CLM16-5
CLF17-5	CLF17-5-CR	CLM17-5
CLF18-5	CLF18-5-CR	CLM18-5
CLF19-5	CLF19-5-CR	CLM19-5
CLF20-5	CLF20-5-CR	CLM20-5
CLF21-5	CLF21-5-CR	CLM21-5
CLF22-5	CLF22-5-CR	CLM22-5
CLF23-5	CLF23-5-CR	CLM23-5
CLF24-5	CLF24-5-CR	CLM24-5

euro-block

SERIE/PRODUCT SERIES

	CRF		CRF-F	
Passo / Pitch(mm)/ Rastermaß	3,5 mm	3,81 mm	3,5 mm	3,81 mm
Poli monoblocco/single mold poles/Polzahl	2÷24		2÷22	
Vite / Screw / Schraube	M2.0		M2.0	
Corpo isolante / Housing / Gehäuse	PA66, UL 94V0		PA66, UL 94V0	
Tensione nominale/Rated Voltage/Nennspannung	250V		250V	
Corrente Nominale/Rated Current/Nennstrom	7A		7A	
Sezione Nominale/Wire section / Nenn querschnitt	1,5 mm2 28÷16 AWG		1,5 mm2 28÷16 AWG	
Temperatura / Temperature / Temperatur	-40°C + 105°C		-40°C + 105°C	
Coppia di torsione / Torque / Anzugsdrehmoment	0,2Nm (1,8 Lb in)		0,2Nm (1,8 Lb in)	
Lunghezza spellatura/ Stripping lenght/ Abisolierlänge	7 mm		7 mm	
VDE	7A-250V		7A-250V	
UL - cUL (file n. E342315)	8A-300V		8A-300V	
*Colore standard/ Standard colour/ Standardfarbe	GN(green)		GN(green)	
	BK (nero - black) / GY (grigio chiaro/light grey)		BK (nero - black) / GY (grigio chiaro/light grey)	

Colori a richiesta/ Colours on request/ Farben auf Anfrage
*= da non specificare sul codice di ordinazione
Do not specify on ordering code
Muss im Bestellcode nicht angegeben werden

Per evitare sbalzi tra i morsetti ed i fori sul c.s. bisogna prevedere una interruzione quando il n. di poli è superiore a 30.

To avoid loss of pitch between terminal block and pcb it is necessary to interrupt the terminal row by poles higher than 30

Die Polzahl sollte maximal 30 betragen damit das Rastermaß von PCB und Leiterplattenklemme noch übereinstimmen

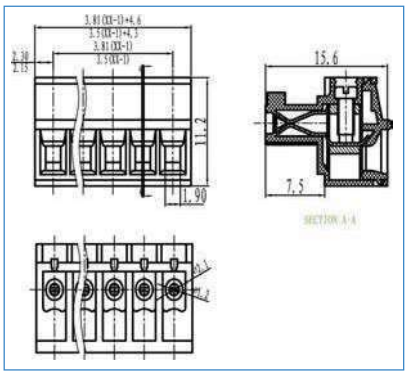

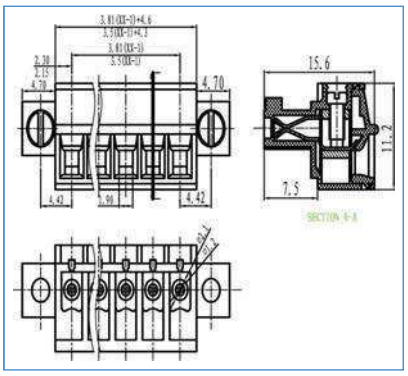

COME ORDINARE
HOW TO ORDER / BESTELLNUMMER

Series	n. poles	pitch	version	color	custom

PASSO / PITCH / RASTERMAẞ

2 POLI	CRF02-3.5	CRF02-3.81	CRF02-3.5-F	CRF02-3.81-F
3 POLI	CRF03-3.5	CRF03-3.81	CRF03-3.5-F	CRF03-3.81-F
	CRF04-3.5	CRF04-3.81	CRF04-3.5-F	CRF04-3.81-F
	CRF05-3.5	CRF05-3.81	CRF05-3.5-F	CRF05-3.81-F
	CRF06-3.5	CRF06-3.81	CRF06-3.5-F	CRF06-3.81-F
	CRF07-3.5	CRF07-3.81	CRF07-3.5-F	CRF07-3.81-F
	CRF08-3.5	CRF08-3.81	CRF08-3.5-F	CRF08-3.81-F
	CRF09-3.5	CRF09-3.81	CRF09-3.5-F	CRF09-3.81-F
	CRF10-3.5	CRF10-3.81	CRF10-3.5-F	CRF10-3.81-F
	CRF11-3.5	CRF11-3.81	CRF11-3.5-F	CRF11-3.81-F
	CRF12-3.5	CRF12-3.81	CRF12-3.5-F	CRF12-3.81-F
	CRF13-3.5	CRF13-3.81	CRF13-3.5-F	CRF13-3.81-F
	CRF14-3.5	CRF14-3.81	CRF14-3.5-F	CRF14-3.81-F
	CRF15-3.5	CRF15-3.81	CRF15-3.5-F	CRF15-3.81-F
	CRF16-3.5	CRF16-3.81	CRF16-3.5-F	CRF16-3.81-F
	CRF17-3.5	CRF17-3.81	CRF17-3.5-F	CRF17-3.81-F
	CRF18-3.5	CRF18-3.81	CRF18-3.5-F	CRF18-3.81-F
	CRF19-3.5	CRF19-3.81	CRF19-3.5-F	CRF19-3.81-F
	CRF20-3.5	CRF20-3.81	CRF20-3.5-F	CRF20-3.81-F
	CRF21-3.5	CRF21-3.81	CRF21-3.5-F	CRF21-3.81-F
	CRF22-3.5	CRF22-3.81	CRF22-3.5-F	CRF22-3.81-F
	CRF23-3.5	CRF23-3.81		
24 POLI	CRF24-3.5	CRF24-3.81		

CRV-R

3,5 mm	3,81 mm
2÷24	
M2.0	
PA66, UL 94V0	
250V	
7A	
1,5 mm2 28÷16 AWG	
-40°C + 105°C	
0,2Nm (1,8 Lb in)	
7 mm	
8A-300V	
GN(green)	
BK (nero - black) / GY (grigio chiaro/light grey)	

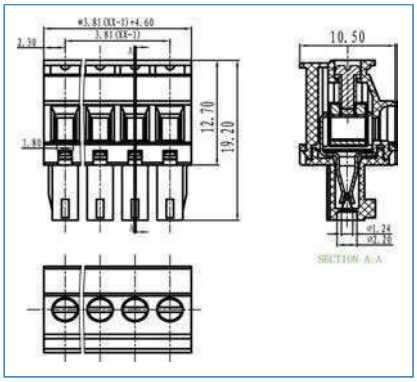

CRV-L

3,5 mm	3,81 mm
2÷24	
M2.0	
PA66, UL 94V0	
250V	
10A	
1,5 mm2 24÷18 AWG	
-40°C + 105°C	
0,2Nm (1,8 Lb in)	
5 mm	
8A-300V	
GN(green)	
BK (nero - black) / GY (grigio chiaro/light grey)	

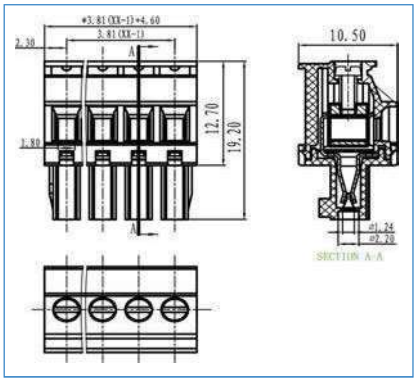

CRV-RF

3,5 mm	3,81 mm
2÷22	
M2.0	
PA66, UL 94V0	
250V	
7A	
1,5 mm2 28÷16 AWG	
-40°C + 105°C	
0,2Nm (1,8 Lb in)	
7 mm	
8A-300V	
GN(green)	
BK (nero - black) / GY (grigio chiaro/light grey)	

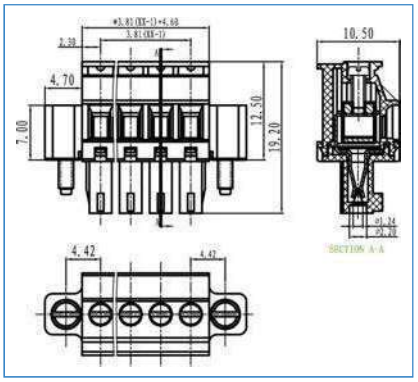

CRV02-3.5-R	CRV02-3.81-R	CRV02-3.5-L	CRV02-3.81-L	CRV02-3.5-RF	CRV02-3.81-RF
CRV03-3.5-R	CRV03-3.81-R	CRV03-3.5-L	CRV03-3.81-L	CRV03-3.5-RF	CRV03-3.81-RF
CRV04-3.5-R	CRV04-3.81-R	CRV04-3.5-L	CRV04-3.81-L	CRV04-3.5-RF	CRV04-3.81-RF
CRV05-3.5-R	CRV05-3.81-R	CRV05-3.5-L	CRV05-3.81-L	CRV05-3.5-RF	CRV05-3.81-RF
CRV06-3.5-R	CRV06-3.81-R	CRV06-3.5-L	CRV06-3.81-L	CRV06-3.5-RF	CRV06-3.81-RF
CRV07-3.5-R	CRV07-3.81-R	CRV07-3.5-L	CRV07-3.81-L	CRV07-3.5-RF	CRV07-3.81-RF
CRV08-3.5-R	CRV08-3.81-R	CRV08-3.5-L	CRV08-3.81-L	CRV08-3.5-RF	CRV08-3.81-RF
CRV09-3.5-R	CRV09-3.81-R	CRV09-3.5-L	CRV09-3.81-L	CRV09-3.5-RF	CRV09-3.81-RF
CRV10-3.5-R	CRV10-3.81-R	CRV10-3.5-L	CRV10-3.81-L	CRV10-3.5-RF	CRV10-3.81-RF
CRV11-3.5-R	CRV11-3.81-R	CRV11-3.5-L	CRV11-3.81-L	CRV11-3.5-RF	CRV11-3.81-RF
CRV12-3.5-R	CRV12-3.81-R	CRV12-3.5-L	CRV12-3.81-L	CRV12-3.5-RF	CRV12-3.81-RF
CRV13-3.5-R	CRV13-3.81-R	CRV13-3.5-L	CRV13-3.81-L	CRV13-3.5-RF	CRV13-3.81-RF
CRV14-3.5-R	CRV14-3.81-R	CRV14-3.5-L	CRV14-3.81-L	CRV14-3.5-RF	CRV14-3.81-RF
CRV15-3.5-R	CRV15-3.81-R	CRV15-3.5-L	CRV15-3.81-L	CRV15-3.5-RF	CRV15-3.81-RF
CRV16-3.5-R	CRV16-3.81-R	CRV16-3.5-L	CRV16-3.81-L	CRV16-3.5-RF	CRV16-3.81-RF
CRV17-3.5-R	CRV17-3.81-R	CRV17-3.5-L	CRV17-3.81-L	CRV17-3.5-RF	CRV17-3.81-RF
CRV18-3.5-R	CRV18-3.81-R	CRV18-3.5-L	CRV18-3.81-L	CRV18-3.5-RF	CRV18-3.81-RF
CRV19-3.5-R	CRV19-3.81-R	CRV19-3.5-L	CRV19-3.81-L	CRV19-3.5-RF	CRV19-3.81-RF
CRV20-3.5-R	CRV20-3.81-R	CRV20-3.5-L	CRV20-3.81-L	CRV20-3.5-RF	CRV20-3.81-RF
CRV21-3.5-R	CRV21-3.81-R	CRV21-3.5-L	CRV21-3.81-L	CRV21-3.5-RF	CRV21-3.81-RF
CRV22-3.5-R	CRV22-3.81-R	CRV22-3.5-L	CRV22-3.81-L	CRV22-3.5-RF	CRV22-3.81-RF
CRV23-3.5-R	CRV23-3.81-R	CRV23-3.5-L	CRV23-3.81-L		
CRV24-3.5-R	CRV24-3.81-R	CRV24-3.5-L	CRV24-3.81-L		

euro-block

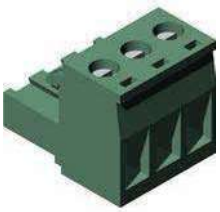

SERIE/PRODUCT SERIES

	CRV-LF		CRF	
Passo / Pitch(mm)/ Rastermaß	3,5 mm	3,81 mm	5 mm	5,08 mm
Poli monoblocco/single mold poles/Polzahl	2÷22		2÷24	
Vite / Screw / Schraube	M2.0		M3	
Corpo isolante / Housing / Gehäuse	PA66, UL 94V0		PA66, UL 94V0	
Tensione nominale/Rated Voltage/Nennspannung	250V		450V	
Corrente Nominale/Rated Current/Nennstrom	7A		20A	
Sezione Nominale/Wire section / Nenn querschnitt	1,5 mm2 28÷16 AWG		2,5 mm2 28÷14 AWG	
Temperatura / Temperature / Temperatur	-40°C + 105°C		-40°C + 105°C	
Coppia di torsione / Torque / Anzugsdrehmoment	0,2Nm (1,8 Lb in)		0,5Nm (4,5 Lb in)	
Lunghezza spellatura/ Stripping lenght/ Abisolierlänge	7 mm		7 mm	
VDE			10A-320V	
UL - cUL (file n. E342315)	8A-300V		15A-300V	
*Colore standard/ Standard colour/ Standardfarbe	GN(green)		GN(green)	
	BK (nero - black) / GY (grigio chiaro/light grey)		BK (nero - black) / GY (grigio chiaro/light grey)	

Colori a richiesta/ Colours on request/ Farben auf Anfrage
*= da non specificare sul codice di ordinazione
Do not specify on ordering code
Muss im Bestellcode nicht angegeben werden

Per evitare sbalzi tra i morsetti ed i fori sul c.s. bisogna prevedere una interruzione quando il n. di poli è superiore a 30.

To avoid loss of pitch between terminal block and pcb it is necessary to interrupt the terminal row by poles higher than 30

Die Polzahl sollte maximal 30 betragen damit das Rastermaß von PCB und Leiterplattenklemme noch übereinstimmen

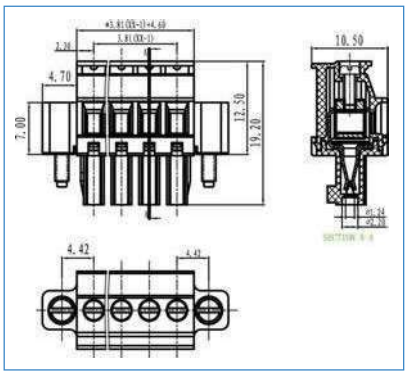

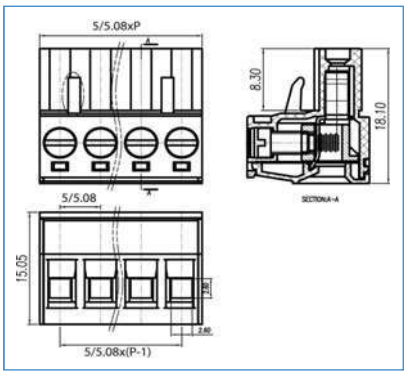

COME ORDINARE
HOW TO ORDER / BESTELLNUMMER

Series	n. poles	pitch	version	color	custom

PASSO / PITCH / RASTERMAẞ

2 POLI	CRV02-3.5-LF	CRV02-3.81-LF	CRF02-5	CRF02-5.08
3 POLI	CRV03-3.5-LF	CRV03-3.81-LF	CRF03-5	CRF03-5.08
	CRV04-3.5-LF	CRV04-3.81-LF	CRF04-5	CRF04-5.08
	CRV05-3.5-LF	CRV05-3.81-LF	CRF05-5	CRF05-5.08
	CRV06-3.5-LF	CRV06-3.81-LF	CRF06-5	CRF06-5.08
	CRV07-3.5-LF	CRV07-3.81-LF	CRF07-5	CRF07-5.08
	CRV08-3.5-LF	CRV08-3.81-LF	CRF08-5	CRF08-5.08
	CRV09-3.5-LF	CRV09-3.81-LF	CRF09-5	CRF09-5.08
	CRV10-3.5-LF	CRV10-3.81-LF	CRF10-5	CRF10-5.08
	CRV11-3.5-LF	CRV11-3.81-LF	CRF11-5	CRF11-5.08
	CRV12-3.5-LF	CRV12-3.81-LF	CRF12-5	CRF12-5.08
	CRV13-3.5-LF	CRV13-3.81-LF	CRF13-5	CRF13-5.08
	CRV14-3.5-LF	CRV14-3.81-LF	CRF14-5	CRF14-5.08
	CRV15-3.5-LF	CRV15-3.81-LF	CRF15-5	CRF15-5.08
	CRV16-3.5-LF	CRV16-3.81-LF	CRF16-5	CRF16-5.08
	CRV17-3.5-LF	CRV17-3.81-LF	CRF17-5	CRF17-5.08
	CRV18-3.5-LF	CRV18-3.81-LF	CRF18-5	CRF18-5.08
	CRV19-3.5-LF	CRV19-3.81-LF	CRF19-5	CRF19-5.08
	CRV20-3.5-LF	CRV20-3.81-LF	CRF20-5	CRF20-5.08
	CRV21-3.5-LF	CRV21-3.81-LF	CRF21-5	CRF21-5.08
	CRV22-3.5-LF	CRV22-3.81-LF	CRF22-5	CRF22-5.08
			CRF23-5	CRF23-5.08
24 POLI			CRF24-5	CRF24-5.08

CRF

7,5 mm	7,62 mm
2÷24	
M3	
PA66, UL 94V0	
450V	
20A	
2,5 mm2 28÷14 AWG	
-40°C + 105°C	
0,5Nm (4,5 Lb in)	
7 mm	
	10A-400V
15A-300V	
GN(green)	
BK (nero - black) / GY (grigio chiaro/light grey)	

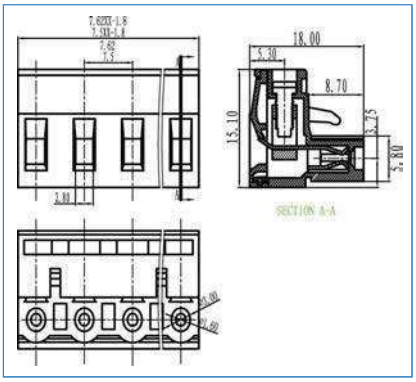

CRF02-7.5	CRF02-7.62
CRF03-7.5	CRF03-7.62
CRF04-7.5	CRF04-7.62
CRF05-7.5	CRF05-7.62
CRF06-7.5	CRF06-7.62
CRF07-7.5	CRF07-7.62
CRF08-7.5	CRF08-7.62
CRF09-7.5	CRF09-7.62
CRF10-7.5	CRF10-7.62
CRF11-7.5	CRF11-7.62
CRF12-7.5	CRF12-7.62
CRF13-7.5	CRF13-7.62
CRF14-7.5	CRF14-7.62
CRF15-7.5	CRF15-7.62
CRF16-7.5	CRF16-7.62
CRF17-7.5	CRF17-7.62
CRF18-7.5	CRF18-7.62
CRF19-7.5	CRF19-7.62
CRF20-7.5	CRF20-7.62
CRF21-7.5	CRF21-7.62
CRF22-7.5	CRF22-7.62
CRF23-7.5	CRF23-7.62
CRF24-7.5	CRF24-7.62

CRF-F

5 mm	5,08 mm
2÷22	
M3	
PA66, UL 94V0	
450V	
20A	
2,5 mm2 28÷14 AWG	
-40°C + 105°C	
0,5Nm (4,5 Lb in)	
7 mm	
10A-320V	
15A-300V	
GN(green)	
BK (nero - black) / GY (grigio chiaro/light grey)	

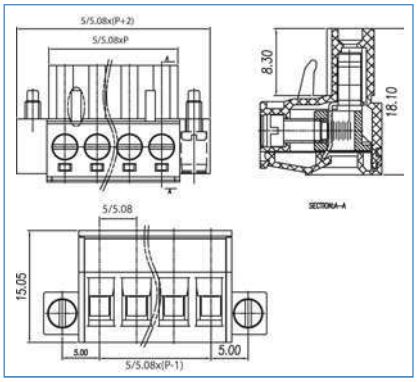

CRF02-5-F	CRF02-5.08-F
CRF03-5-F	CRF03-5.08-F
CRF04-5-F	CRF04-5.08-F
CRF05-5-F	CRF05-5.08-F
CRF06-5-F	CRF06-5.08-F
CRF07-5-F	CRF07-5.08-F
CRF08-5-F	CRF08-5.08-F
CRF09-5-F	CRF09-5.08-F
CRF10-5-F	CRF10-5.08-F
CRF11-5-F	CRF11-5.08-F
CRF12-5-F	CRF12-5.08-F
CRF13-5-F	CRF13-5.08-F
CRF14-5-F	CRF14-5.08-F
CRF15-5-F	CRF15-5.08-F
CRF16-5-F	CRF16-5.08-F
CRF17-5-F	CRF17-5.08-F
CRF18-5-F	CRF18-5.08-F
CRF19-5-F	CRF19-5.08-F
CRF20-5-F	CRF20-5.08-F
CRF21-5-F	CRF21-5.08-F
CRF22-5-F	CRF22-5.08-F

CRF-F

7,5 mm	7,62
2÷22	
M3	
PA66, UL 94V0	
450V	
20A	
2,5 mm2 28÷14 AWG	
-40°C + 105°C	
0,5Nm (4,5 Lb in)	
7 mm	
10A-400V	
15A-300V	
GN(green)	
BK (nero - black) / GY (grigio chiaro/light grey)	

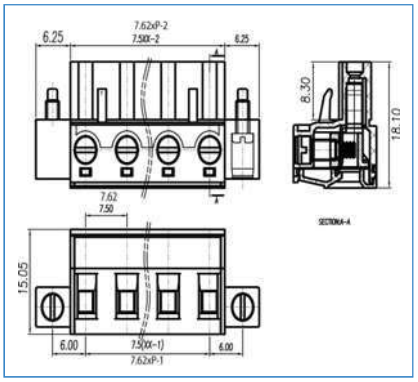

CRF02-7.5-F	CRF02-7.62-F
CRF03-7.5-F	CRF03-7.62-F
CRF04-7.5-F	CRF04-7.62-F
CRF05-7.5-F	CRF05-7.62-F
CRF06-7.5-F	CRF06-7.62-F
CRF07-7.5-F	CRF07-7.62-F
CRF08-7.5-F	CRF08-7.62-F
CRF09-7.5-F	CRF09-7.62-F
CRF10-7.5-F	CRF10-7.62-F
CRF11-7.5-F	CRF11-7.62-F
CRF12-7.5-F	CRF12-7.62-F
CRF13-7.5-F	CRF13-7.62-F
CRF14-7.5-F	CRF14-7.62-F
CRF15-7.5-F	CRF15-7.62-F
CRF16-7.5-F	CRF16-7.62-F
CRF17-7.5-F	CRF17-7.62-F
CRF18-7.5-F	CRF18-7.62-F
CRF19-7.5-F	CRF19-7.62-F
CRF20-7.5-F	CRF20-7.62-F
CRF21-7.5-F	CRF21-7.62-F
CRF22-7.5-F	CRF22-7.62-F

euro-block

SERIE/PRODUCT SERIES

	CRV-R		CRV-L	
Passo / Pitch(mm)/ Rastermaß	5 mm	5,08	5 mm	5,08
Poli monoblocco/single mold poles/Polzahl	2÷24		2÷24	
Vite / Screw / Schraube	M3		M3	
Corpo isolante / Housing / Gehäuse	PA66, UL 94V0		PA66, UL 94V0	
Tensione nominale/Rated Voltage/Nennspannung	450V		450V	
Corrente Nominale/Rated Current/Nennstrom	20A		20A	
Sezione Nominale/Wire section / Nenn querschnitt	2,5 mm2 28÷14 AWG		2,5 mm2 28÷14 AWG	
Temperatura / Temperature / Temperatur	-40°C + 105°C		-40°C + 105°C	
Coppia di torsione / Torque / Anzugsdrehmoment	0,5Nm (4,5 Lb in)		0,5Nm (4,5 Lb in)	
Lunghezza spellatura/ Stripping lenght/ Abisolierlänge	7 mm		7 mm	
VDE				
UL - cUL (file n. E342315)	15A-300V		15A-300V	
*Colore standard/ Standard colour/ Standardfarbe	GN(green)		GN(green)	
	BK (nero - black) / GY (grigio chiaro/light grey)		BK (nero - black) / GY (grigio chiaro/light grey)	

Colori a richiesta/ Colours on request/ Farben auf Anfrage
*= da non specificare sul codice di ordinazione
Do not specify on ordering code
Muss im Bestellcode nicht angegeben werden

Per evitare sbalzi tra i morsetti ed i fori sul c.s. bisogna prevedere una interruzione quando il n. di poli è superiore a 30.

To avoid loss of pitch between terminal block and pcb it is necessary to interrupt the terminal row by poles higher than 30

Die Polzahl sollte maximal 30 betragen damit das Rastermaß von PCB und Leiterplattenklemme noch übereinstimmen

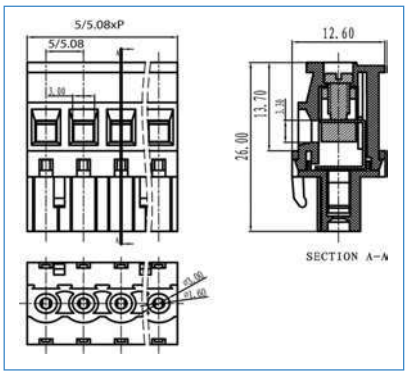

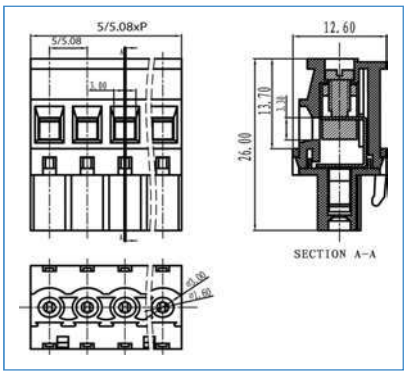

COME ORDINARE
HOW TO ORDER / BESTELLNUMMER

Series	n. poles	pitch	version	color	custom

PASSO / PITCH / RASTERMAẞ

2 POLI	CRV02-5-R	CRV02-5.08-R	CRV02-5-L	CRV02-5.08-L
3 POLI	CRV03-5-R	CRV03-5.08-R	CRV03-5-L	CRV03-5.08-L
	CRV04-5-R	CRV04-5.08-R	CRV04-5-L	CRV04-5.08-L
	CRV05-5-R	CRV05-5.08-R	CRV05-5-L	CRV05-5.08-L
	CRV06-5-R	CRV06-5.08-R	CRV06-5-L	CRV06-5.08-L
	CRV07-5-R	CRV07-5.08-R	CRV07-5-L	CRV07-5.08-L
	CRV08-5-R	CRV08-5.08-R	CRV08-5-L	CRV08-5.08-L
	CRV09-5-R	CRV09-5.08-R	CRV09-5-L	CRV09-5.08-L
	CRV10-5-R	CRV10-5.08-R	CRV10-5-L	CRV10-5.08-L
	CRV11-5-R	CRV11-5.08-R	CRV11-5-L	CRV11-5.08-L
	CRV12-5-R	CRV12-5.08-R	CRV12-5-L	CRV12-5.08-L
	CRV13-5-R	CRV13-5.08-R	CRV13-5-L	CRV13-5.08-L
	CRV14-5-R	CRV14-5.08-R	CRV14-5-L	CRV14-5.08-L
	CRV15-5-R	CRV15-5.08-R	CRV15-5-L	CRV15-5.08-L
	CRV16-5-R	CRV16-5.08-R	CRV16-5-L	CRV16-5.08-L
	CRV17-5-R	CRV17-5.08-R	CRV17-5-L	CRV17-5.08-L
	CRV18-5-R	CRV18-5.08-R	CRV18-5-L	CRV18-5.08-L
	CRV19-5-R	CRV19-5.08-R	CRV19-5-L	CRV19-5.08-L
	CRV20-5-R	CRV20-5.08-R	CRV20-5-L	CRV20-5.08-L
	CRV21-5-R	CRV21-5.08-R	CRV21-5-L	CRV21-5.08-L
	CRV22-5-R	CRV22-5.08-R	CRV22-5-L	CRV22-5.08-L
	CRV23-5-R	CRV23-5.08-R	CRV23-5-L	CRV23-5.08-L
24 POLI	CRV24-5-R	CRV24-5.08-R	CRV24-5-L	CRV24-5.08-L

CRV-R

7,5 mm	7,62 mm
2÷24	
M3	
PA66, UL 94V0	
450V	
20A	
2,5 mm2 28÷14 AWG	
-40°C + 105°C	
0,5Nm (4,5 Lb in)	
7 mm	
15A-300V	
GN(green)	
BK (nero - black) / GY (grigio chiaro/light grey)	

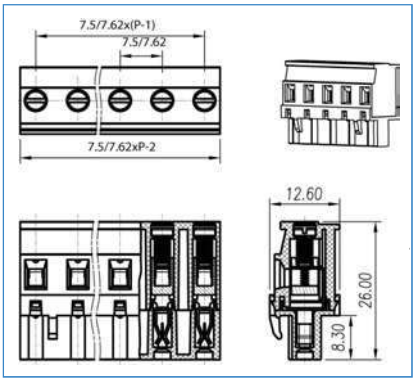

CRV-L

7,5 mm	7,62 mm
2÷24	
M3	
PA66, UL 94V0	
450V	
20A	
2,5 mm2 28÷14 AWG	
-40°C + 105°C	
0,5Nm (4,5 Lb in)	
7 mm	
15A-300V	
GN(green)	
BK (nero - black) / GY (grigio chiaro/light grey)	

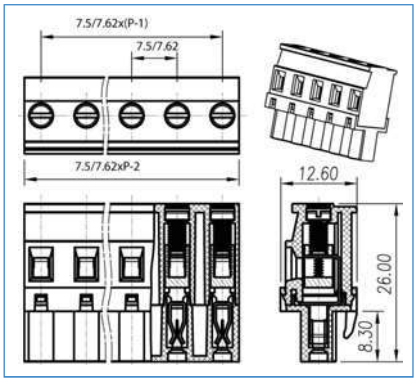

CRV-RF

5 mm	5,08 mm
2÷22	
M3	
PA66, UL 94V0	
450V	
20A	
2,5 mm2 28÷14 AWG	
-40°C + 105°C	
0,5Nm (4,5 Lb in)	
7 mm	
15A-300V	
GN(green)	
BK (nero - black) / GY (grigio chiaro/light grey)	

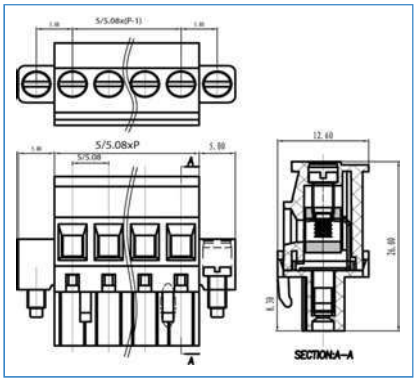

CRV02-7.5-R	CRV02-7.62-R	CRV02-7.5-L	CRV02-7.62-L	CRV02-5-RF	CRV02-5.08-RF
CRV03-7.5-R	CRV03-7.62-R	CRV03-7.5-L	CRV03-7.62-L	CRV03-5-RF	CRV03-5.08-RF
CRV04-7.5-R	CRV04-7.62-R	CRV04-7.5-L	CRV04-7.62-L	CRV04-5-RF	CRV04-5.08-RF
CRV05-7.5-R	CRV05-7.62-R	CRV05-7.5-L	CRV05-7.62-L	CRV05-5-RF	CRV05-5.08-RF
CRV06-7.5-R	CRV06-7.62-R	CRV06-7.5-L	CRV06-7.62-L	CRV06-5-RF	CRV06-5.08-RF
CRV07-7.5-R	CRV07-7.62-R	CRV07-7.5-L	CRV07-7.62-L	CRV07-5-RF	CRV07-5.08-RF
CRV08-7.5-R	CRV08-7.62-R	CRV08-7.5-L	CRV08-7.62-L	CRV08-5-RF	CRV08-5.08-RF
CRV09-7.5-R	CRV09-7.62-R	CRV09-7.5-L	CRV09-7.62-L	CRV09-5-RF	CRV09-5.08-RF
CRV10-7.5-R	CRV10-7.62-R	CRV10-7.5-L	CRV10-7.62-L	CRV10-5-RF	CRV10-5.08-RF
CRV11-7.5-R	CRV11-7.62-R	CRV11-7.5-L	CRV11-7.62-L	CRV11-5-RF	CRV11-5.08-RF
CRV12-7.5-R	CRV12-7.62-R	CRV12-7.5-L	CRV12-7.62-L	CRV12-5-RF	CRV12-5.08-RF
CRV13-7.5-R	CRV13-7.62-R	CRV13-7.5-L	CRV13-7.62-L	CRV13-5-RF	CRV13-5.08-RF
CRV14-7.5-R	CRV14-7.62-R	CRV14-7.5-L	CRV14-7.62-L	CRV14-5-RF	CRV14-5.08-RF
CRV15-7.5-R	CRV15-7.62-R	CRV15-7.5-L	CRV15-7.62-L	CRV15-5-RF	CRV15-5.08-RF
CRV16-7.5-R	CRV16-7.62-R	CRV16-7.5-L	CRV16-7.62-L	CRV16-5-RF	CRV16-5.08-RF
CRV17-7.5-R	CRV17-7.62-R	CRV17-7.5-L	CRV17-7.62-L	CRV17-5-RF	CRV17-5.08-RF
CRV18-7.5-R	CRV18-7.62-R	CRV18-7.5-L	CRV18-7.62-L	CRV18-5-RF	CRV18-5.08-RF
CRV19-7.5-R	CRV19-7.62-R	CRV19-7.5-L	CRV19-7.62-L	CRV19-5-RF	CRV19-5.08-RF
CRV20-7.5-R	CRV20-7.62-R	CRV20-7.5-L	CRV20-7.62-L	CRV20-5-RF	CRV20-5.08-RF
CRV21-7.5-R	CRV21-7.62-R	CRV21-7.5-L	CRV21-7.62-L	CRV21-5-RF	CRV21-5.08-RF
CRV22-7.5-R	CRV22-7.62-R	CRV22-7.5-L	CRV22-7.62-L	CRV22-5-RF	CRV22-5.08-RF
CRV23-7.5-R	CRV23-7.62-R	CRV23-7.5-L	CRV23-7.62-L		
CRV24-7.5-R	CRV24-7.62-R	CRV24-7.5-L	CRV24-7.62-L		

euro-block

SERIE/PRODUCT SERIES

	CRV-LF		CRV-RF	
Passo / Pitch(mm)/ Rastermaß	5 mm	5,08 mm	7,5 mm	7,62 mm
Poli monoblocco/single mold poles/Polzahl	2÷22		2÷22	
Vite / Screw / Schraube	M3		M3	
Corpo isolante / Housing / Gehäuse	PA66, UL 94V0		PA66, UL 94V0	
Tensione nominale/Rated Voltage/Nennspannung	450V		450V	
Corrente Nominale/Rated Current/Nennstrom	20A		20A	
Sezione Nominale/Wire section / Nenn querschnitt	2,5 mm2 28÷14 AWG		2,5 mm2 28÷14 AWG	
Temperatura / Temperature / Temperatur	-40°C + 105°C		-40°C + 105°C	
Coppia di torsione / Torque / Anzugsdrehmoment	0,5Nm (4,5 Lb in)		0,5Nm (4,5 Lb in)	
Lunghezza spellatura/ Stripping lenght/ Abisolierlänge	7 mm		7 mm	
VDE				
UL - cUL (file n. E342315)	15A-300V		15A-300V	
*Colore standard/ Standard colour/ Standardfarbe	GN(green)		GN(green)	
	BK (nero - black) / GY (grigio chiaro/light grey)		BK (nero - black) / GY (grigio chiaro/light grey)	

Colori a richiesta/ Colours on request/ Farben auf Anfrage
*= da non specificare sul codice di ordinazione
Do not specify on ordering code
Muss im Bestellcode nicht angegeben werden

Per evitare sbalzi tra i morsetti ed i fori sul c.s. bisogna prevedere una interruzione quando il n. di poli è superiore a 30.

To avoid loss of pitch between terminal block and pcb it is necessary to interrupt the terminal row by poles higher than 30

Die Polzahl sollte maximal 30 betragen damit das Rastermaß von PCB und Leiterplattenklemme noch übereinstimmen

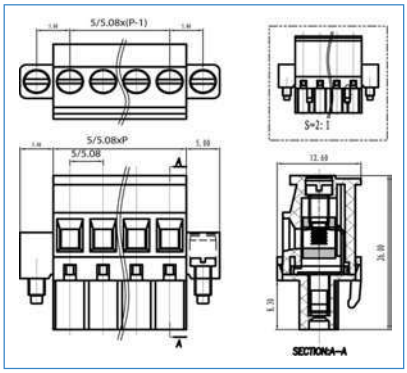

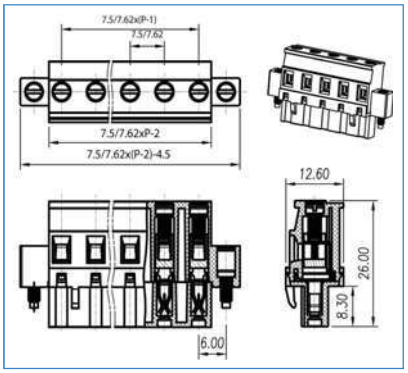

COME ORDINARE
HOW TO ORDER / BESTELLNUMMER

Series	n. poles	pitch	version	color	custom

PASSO / PITCH / RASTERMAẞ

2 POLI	CRV02-5-LF	CRV02-5.08-LF	CRV02-7.5-RF	CRV02-7.62-RF
3 POLI	CRV03-5-LF	CRV03-5.08-LF	CRV03-7.5-RF	CRV03-7.62-RF
	CRV04-5-LF	CRV04-5.08-LF	CRV04-7.5-RF	CRV04-7.62-RF
	CRV05-5-LF	CRV05-5.08-LF	CRV05-7.5-RF	CRV05-7.62-RF
	CRV06-5-LF	CRV06-5.08-LF	CRV06-7.5-RF	CRV06-7.62-RF
	CRV07-5-LF	CRV07-5.08-LF	CRV07-7.5-RF	CRV07-7.62-RF
	CRV08-5-LF	CRV08-5.08-LF	CRV08-7.5-RF	CRV08-7.62-RF
	CRV09-5-LF	CRV09-5.08-LF	CRV09-7.5-RF	CRV09-7.62-RF
	CRV10-5-LF	CRV10-5.08-LF	CRV10-7.5-RF	CRV10-7.62-RF
	CRV11-5-LF	CRV11-5.08-LF	CRV11-7.5-RF	CRV11-7.62-RF
	CRV12-5-LF	CRV12-5.08-LF	CRV12-7.5-RF	CRV12-7.62-RF
	CRV13-5-LF	CRV13-5.08-LF	CRV13-7.5-RF	CRV13-7.62-RF
	CRV14-5-LF	CRV14-5.08-LF	CRV14-7.5-RF	CRV14-7.62-RF
	CRV15-5-LF	CRV15-5.08-LF	CRV15-7.5-RF	CRV15-7.62-RF
	CRV16-5-LF	CRV16-5.08-LF	CRV16-7.5-RF	CRV16-7.62-RF
	CRV17-5-LF	CRV17-5.08-LF	CRV17-7.5-RF	CRV17-7.62-RF
	CRV18-5-LF	CRV18-5.08-LF	CRV18-7.5-RF	CRV18-7.62-RF
	CRV19-5-LF	CRV19-5.08-LF	CRV19-7.5-RF	CRV19-7.62-RF
	CRV20-5-LF	CRV20-5.08-LF	CRV20-7.5-RF	CRV20-7.62-RF
	CRV21-5-LF	CRV21-5.08-LF	CRV21-7.5-RF	CRV21-7.62-RF
	CRV22-5-LF	CRV22-5.08-LF	CRV22-7.5-RF	CRV22-7.62-RF
24 POLI				

CRV-LF

7,5 mm	7,62 mm
2÷22	
M3	
PA66, UL 94V0	
450V	
20A	
2,5 mm2 28÷14 AWG	
-40°C + 105°C	
0,5Nm (4,5 Lb in)	
7 mm	
15A-300V	
GN(green)	
BK (nero - black) / GY (grigio chiaro/light grey)	

CRI

5,08 mm
2÷24
PA66, UL 94V0
450V
20A
-40°C + 105°C
15A-300V
GN(green)
BK (nero - black) / GY (grigio chiaro/light grey)

CRI-F

5,08 mm
2÷22
PA66, UL 94V0
450V
20A
-40°C + 105°C
15A-300V
GN(green)
BK (nero - black) / GY (grigio chiaro/light grey)

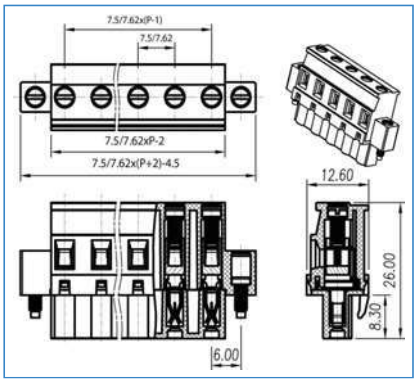

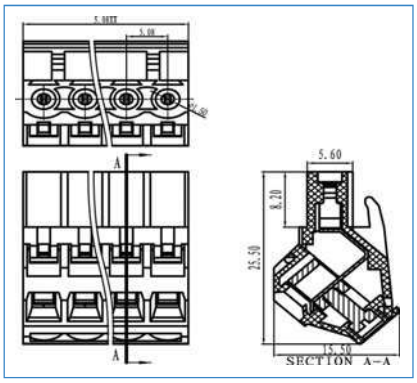

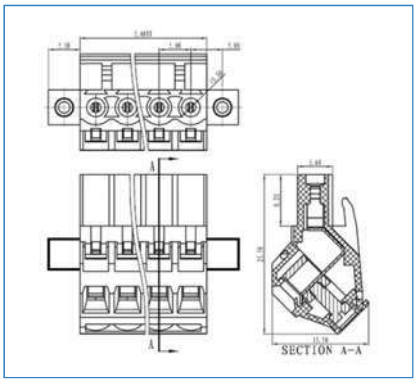

CRV02-7.5-LF	CRV02-7.62-LF	CRI02-5.08	CRI02-5.08-F
CRV03-7.5-LF	CRV03-7.62-LF	CRI03-5.08	CRI03-5.08-F
CRV04-7.5-LF	CRV04-7.62-LF	CRI04-5.08	CRI04-5.08-F
CRV05-7.5-LF	CRV05-7.62-LF	CRI05-5.08	CRI05-5.08-F
CRV06-7.5-LF	CRV06-7.62-LF	CRI06-5.08	CRI06-5.08-F
CRV07-7.5-LF	CRV07-7.62-LF	CRI07-5.08	CRI07-5.08-F
CRV08-7.5-LF	CRV08-7.62-LF	CRI08-5.08	CRI08-5.08-F
CRV09-7.5-LF	CRV09-7.62-LF	CRI09-5.08	CRI09-5.08-F
CRV10-7.5-LF	CRV10-7.62-LF	CRI10-5.08	CRI10-5.08-F
CRV11-7.5-LF	CRV11-7.62-LF	CRI11-5.08	CRI11-5.08-F
CRV12-7.5-LF	CRV12-7.62-LF	CRI12-5.08	CRI12-5.08-F
CRV13-7.5-LF	CRV13-7.62-LF	CRI13-5.08	CRI13-5.08-F
CRV14-7.5-LF	CRV14-7.62-LF	CRI14-5.08	CRI14-5.08-F
CRV15-7.5-LF	CRV15-7.62-LF	CRI15-5.08	CRI15-5.08-F
CRV16-7.5-LF	CRV16-7.62-LF	CRI16-5.08	CRI16-5.08-F
CRV17-7.5-LF	CRV17-7.62-LF	CRI17-5.08	CRI17-5.08-F
CRV18-7.5-LF	CRV18-7.62-LF	CRI18-5.08	CRI18-5.08-F
CRV19-7.5-LF	CRV19-7.62-LF	CRI19-5.08	CRI19-5.08-F
CRV20-7.5-LF	CRV20-7.62-LF	CRI20-5.08	CRI20-5.08-F
CRV21-7.5-LF	CRV21-7.62-LF	CRI21-5.08	CRI21-5.08-F
CRV22-7.5-LF	CRV22-7.62-LF	CRI22-5.08	CRI22-5.08-F
		CRI23-5.08	
		CRI24-5.08	

euro-block

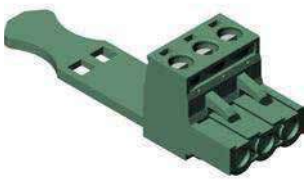

SERIE/PRODUCT SERIES

	CRF-L	CRS
Passo / Pitch(mm)/ Rastermaß	5 mm 5,08 mm	3,81 mm
Poli monoblocco/single mold poles/Polzahl	2÷24	2÷24
Vite / Screw / Schraube	M3	M2.0
Corpo isolante / Housing / Gehäuse	PA66, UL 94V0	PA66, UL 94V0
Tensione nominale/Rated Voltage/Nennspannung	450V	250V
Corrente Nominale/Rated Current/Nennstrom	20A	7A
Sezione Nominale/Wire section / Nenn querschnitt	2,5 mm2 28÷14 AWG	1,5 mm2 28÷16 AWG
Temperatura / Temperature / Temperatur	-40°C + 105°C	-40°C + 105°C
Coppia di torsione / Torque / Anzugsdrehmoment	0,5Nm (4,5 Lb in)	0,2Nm (1,8 Lb in)
Lunghezza spellatura/ Stripping lenght/ Abisolierlänge	7 mm	7 mm
VDE		
UL - cUL (file n. E342315)	15A-300V	8A-300V
*Colore standard/ Standard colour/ Standardfarbe	GN(green)	GN(green)
	BK (nero - black) / GY (grigio chiaro/light grey)	BK (nero - black) / GY (grigio chiaro/light grey)

Colori a richiesta/ Colours on request/ Farben auf Anfrage
*= da non specificare sul codice di ordinazione
Do not specify on ordering code
Muss im Bestellcode nicht angegeben werden

Per evitare sbalzi tra i morsetti ed i fori sul c.s. bisogna prevedere una interruzione quando il n. di poli è superiore a 30.

To avoid loss of pitch between terminal block and pcb it is necessary to interrupt the terminal row by poles higher than 30

Die Polzahl sollte maximal 30 betragen damit das Rastermaß von PCB und Leiterplattenklemme noch übereinstimmen

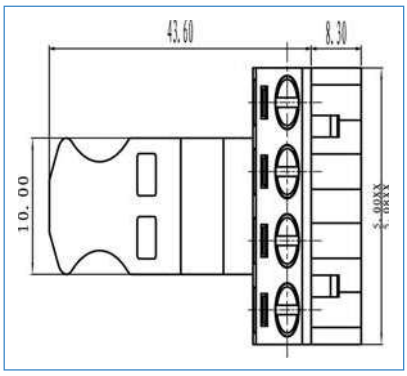

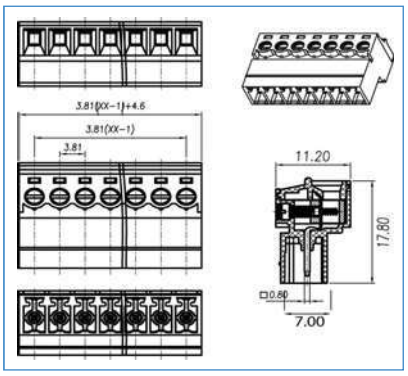

COME ORDINARE
HOW TO ORDER / BESTELLNUMMER

Series	n. poles	pitch	version	color	custom

PASSO / PITCH / RASTERMAẞ

2 POLI	CRF02-5-L	CRF02-5.08-L	CRS02-3.81
3 POLI	CRF03-5-L	CRF03-5.08-L	CRS03-3.81
	CRF04-5-L	CRF04-5.08-L	CRS04-3.81
	CRF05-5-L	CRF05-5.08-L	CRS05-3.81
	CRF06-5-L	CRF06-5.08-L	CRS06-3.81
	CRF07-5-L	CRF07-5.08-L	CRS07-3.81
	CRF08-5-L	CRF08-5.08-L	CRS08-3.81
	CRF09-5-L	CRF09-5.08-L	CRS09-3.81
	CRF10-5-L	CRF10-5.08-L	CRS10-3.81
	CRF11-5-L	CRF11-5.08-L	CRS11-3.81
	CRF12-5-L	CRF12-5.08-L	CRS12-3.81
	CRF13-5-L	CRF13-5.08-L	CRS13-3.81
	CRF14-5-L	CRF14-5.08-L	CRS14-3.81
	CRF15-5-L	CRF15-5.08-L	CRS15-3.81
	CRF16-5-L	CRF16-5.08-L	CRS16-3.81
	CRF17-5-L	CRF17-5.08-L	CRS17-3.81
	CRF18-5-L	CRF18-5.08-L	CRS18-3.81
	CRF19-5-L	CRF19-5.08-L	CRS19-3.81
	CRF20-5-L	CRF20-5.08-L	CRS20-3.81
	CRF21-5-L	CRF21-5.08-L	CRS21-3.81
	CRF22-5-L	CRF22-5.08-L	CRS22-3.81
	CRF23-5-L	CRF23-5.08-L	CRS23-3.81
24 POLI	CRF24-5-L	CRF24-5.08-L	CRS24-3.81

CRS-F	CRS	CRS-F
3,81 mm	5,08 mm	5,08 mm
2÷22	2÷24	2÷22
M2.0	M3	M3
PA66, UL 94V0	PA66, UL 94V0	PA66, UL 94V0
250V	450V	450V
7A	20A	20A
1,5 mm2 28÷16 AWG	2,5 mm2 28÷14 AWG	2,5 mm2 28÷14 AWG
-40°C + 105°C	-40°C + 105°C	-40°C + 105°C
0,2Nm (1,8 Lb in)	0,5Nm (4,5 Lb in)	0,5Nm (4,5 Lb in)
7 mm	7 mm	7 mm
8A-300V	15A-300V	15A-300V
GN(green)	GN(green)	GN(green)
BK (nero - black) / GY (grigio chiaro/light grey)	BK (nero - black) / GY (grigio chiaro/light grey)	BK (nero - black) / GY (grigio chiaro/light grey)

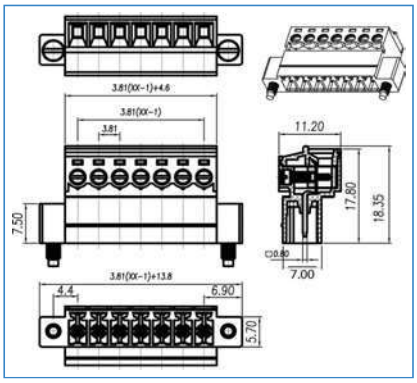

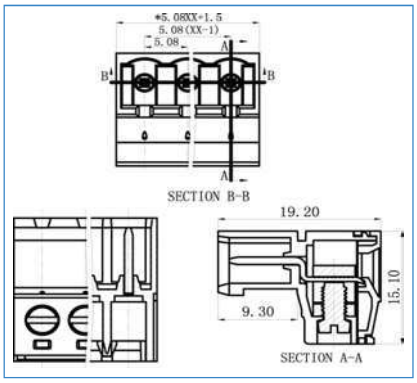

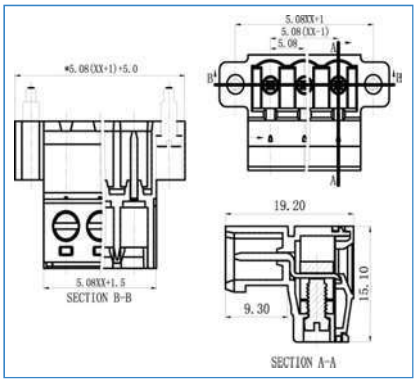

CRS02-3.81-F	CRS02-5.08	CRS02-5.08-F
CRS03-3.81-F	CRS03-5.08	CRS03-5.08-F
CRS04-3.81-F	CRS04-5.08	CRS04-5.08-F
CRS05-3.81-F	CRS05-5.08	CRS05-5.08-F
CRS06-3.81-F	CRS06-5.08	CRS06-5.08-F
CRS07-3.81-F	CRS07-5.08	CRS07-5.08-F
CRS08-3.81-F	CRS08-5.08	CRS08-5.08-F
CRS09-3.81-F	CRS09-5.08	CRS09-5.08-F
CRS10-3.81-F	CRS10-5.08	CRS10-5.08-F
CRS11-3.81-F	CRS11-5.08	CRS11-5.08-F
CRS12-3.81-F	CRS12-5.08	CRS12-5.08-F
CRS13-3.81-F	CRS13-5.08	CRS13-5.08-F
CRS14-3.81-F	CRS14-5.08	CRS14-5.08-F
CRS15-3.81-F	CRS15-5.08	CRS15-5.08-F
CRS16-3.81-F	CRS16-5.08	CRS16-5.08-F
CRS17-3.81-F	CRS17-5.08	CRS17-5.08-F
CRS18-3.81-F	CRS18-5.08	CRS18-5.08-F
CRS19-3.81-F	CRS19-5.08	CRS19-5.08-F
CRS20-3.81-F	CRS20-5.08	CRS20-5.08-F
CRS21-3.81-F	CRS21-5.08	CRS21-5.08-F
CRS22-3.81-F	CRS22-5.08	CRS22-5.08-F
	CRS23-5.08	
	CRS24-5.08	

euro-block

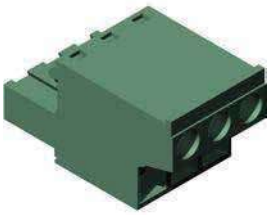

SERIE/PRODUCT SERIES

	CRS-G	CFF
Passo / Pitch(mm)/ Rastermaß	5,08 mm	3,81 mm
Poli monoblocco/single mold poles/Polzahl	2÷22	2÷24
Vite / Screw / Schraube	M3	M2.0
Corpo isolante / Housing / Gehäuse	PA66, UL 94V0	PA66, UL 94V0
Tensione nominale/Rated Voltage/Nennspannung	450V	250V
Corrente Nominale/Rated Current/Nennstrom	20A	7A
Sezione Nominale/Wire section / Nenn querschnitt	2,5 mm2 28÷14 AWG	1,5 mm2 28÷16 AWG
Temperatura / Temperature / Temperatur	-40°C + 105°C	-40°C + 105°C
Coppia di torsione / Torque / Anzugsdrehmoment	0,5Nm (4,5 Lb in)	0,2Nm (1,8 Lb in)
Lunghezza spellatura/ Stripping lenght/ Abisolierlänge	7 mm	7 mm
VDE		
UL - cUL (file n. E342315)	15A-300V	8A-300V
*Colore standard/ Standard colour/ Standardfarbe	GN(green)	GN(green)
	BK (nero - black) / GY (grigio chiaro/light grey)	BK (nero - black) / GY (grigio chiaro/light grey)

Colori a richiesta/ Colours on request/ Farben auf Anfrage
*= da non specificare sul codice di ordinazione
Do not specify on ordering code
Muss im Bestellcode nicht angegeben werden

Per evitare sbalzi tra i morsetti ed i fori sul c.s. bisogna prevedere una interruzione quando il n. di poli è superiore a 30.

To avoid loss of pitch between terminal block and pcb it is necessary to interrupt the terminal row by poles higher than 30

Die Polzahl sollte maximal 30 betragen damit das Rastermaß von PCB und Leiterplattenklemme noch übereinstimmen

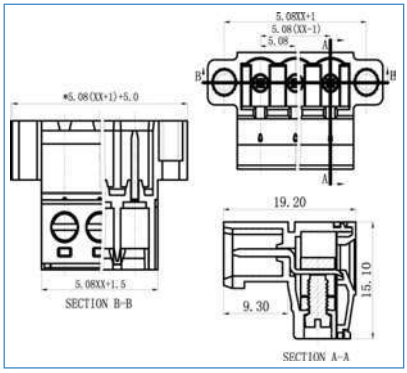

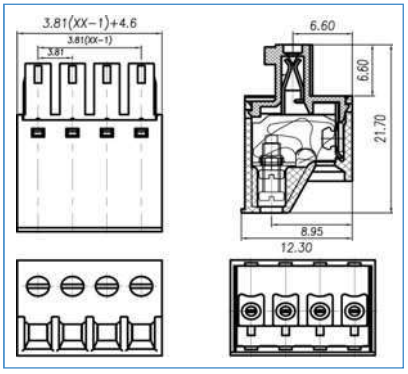

COME ORDINARE
HOW TO ORDER / BESTELLNUMMER

Series	n. poles	pitch	version	color	custom

PASSO / PITCH / RASTERMAß

	CRS-G	CFF
2 POLI	CRS02-5.08-G	CFF02-3.81
3 POLI	CRS03-5.08-G	CFF03-3.81
	CRS04-5.08-G	CFF04-3.81
	CRS05-5.08-G	CFF05-3.81
	CRS06-5.08-G	CFF06-3.81
	CRS07-5.08-G	CFF07-3.81
	CRS08-5.08-G	CFF08-3.81
	CRS09-5.08-G	CFF09-3.81
	CRS10-5.08-G	CFF10-3.81
	CRS11-5.08-G	CFF11-3.81
	CRS12-5.08-G	CFF12-3.81
	CRS13-5.08-G	CFF13-3.81
	CRS14-5.08-G	CFF14-3.81
	CRS15-5.08-G	CFF15-3.81
	CRS16-5.08-G	CFF16-3.81
	CRS17-5.08-G	CFF17-3.81
	CRS18-5.08-G	CFF18-3.81
	CRS19-5.08-G	CFF19-3.81
	CRS20-5.08-G	CFF20-3.81
	CRS21-5.08-G	CFF21-3.81
	CRS22-5.08-G	CFF22-3.81
		CFF23-3.81
24 POLI		CFF24-3.81

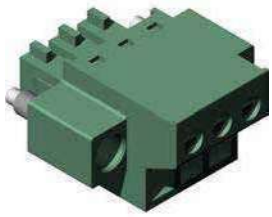

CFF-F

3,81 mm
2÷22
M2.0
PA66, UL 94V0
250V
7A
1,5 mm2 28÷16 AWG
-40°C + 105°C
0,2Nm (1,8 Lb in)
7 mm
8A-300V
GN(green)
BK (nero - black) / GY (grigio chiaro/light grey)

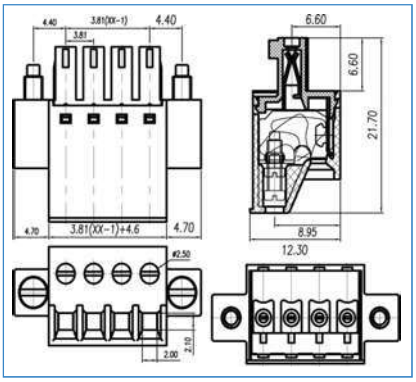

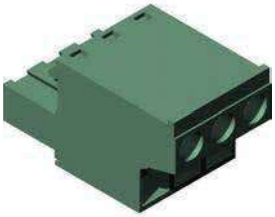

CFF

5,08 mm
2÷24
M2.0
PA66, UL 94V0
450V
20A
2,5 mm2 28÷14 AWG
-40°C + 105°C
0,2Nm (1,8 Lb in)
7 mm
15A-300V
GN(green)
BK (nero - black) / GY (grigio chiaro/light grey)

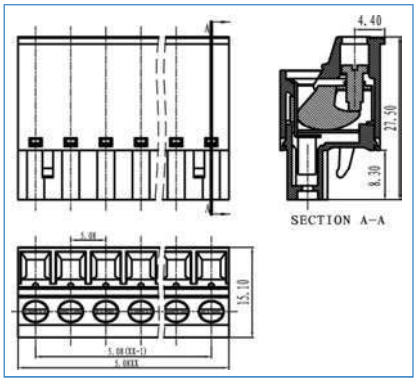

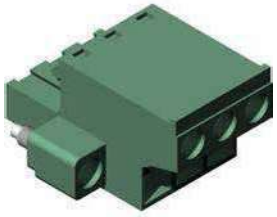

CFF-F

5,08 mm
2÷22
M2.0
PA66, UL 94V0
450V
20A
2,5 mm2 28÷14 AWG
-40°C + 105°C
0,2Nm (1,8 Lb in)
7 mm
15A-300V
GN(green)
BK (nero - black) / GY (grigio chiaro/light grey)

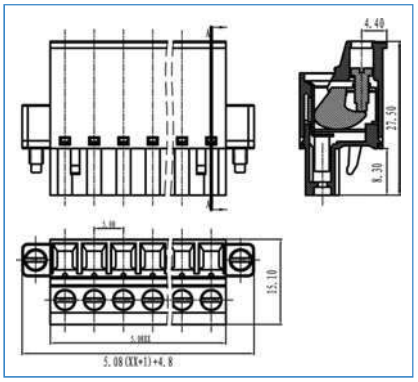

CFF02-3.81-F	CFF02-5.08	CFF02-5.08-F
CFF03-3.81-F	CFF03-5.08	CFF03-5.08-F
CFF04-3.81-F	CFF04-5.08	CFF04-5.08-F
CFF05-3.81-F	CFF05-5.08	CFF05-5.08-F
CFF06-3.81-F	CFF06-5.08	CFF06-5.08-F
CFF07-3.81-F	CFF07-5.08	CFF07-5.08-F
CFF08-3.81-F	CFF08-5.08	CFF08-5.08-F
CFF09-3.81-F	CFF09-5.08	CFF09-5.08-F
CFF10-3.81-F	CFF10-5.08	CFF10-5.08-F
CFF11-3.81-F	CFF11-5.08	CFF11-5.08-F
CFF12-3.81-F	CFF12-5.08	CFF12-5.08-F
CFF13-3.81-F	CFF13-5.08	CFF13-5.08-F
CFF14-3.81-F	CFF14-5.08	CFF14-5.08-F
CFF15-3.81-F	CFF15-5.08	CFF15-5.08-F
CFF16-3.81-F	CFF16-5.08	CFF16-5.08-F
CFF17-3.81-F	CFF17-5.08	CFF17-5.08-F
CFF18-3.81-F	CFF18-5.08	CFF18-5.08-F
CFF19-3.81-F	CFF19-5.08	CFF19-5.08-F
CFF20-3.81-F	CFF20-5.08	CFF20-5.08-F
CFF21-3.81-F	CFF21-5.08	CFF21-5.08-F
CFF22-3.81-F	CFF22-5.08	CFF22-5.08-F
	CFF23-5.08	
	CFF24-5.08	

euro-block

SERIE/PRODUCT SERIES

	CFS	CFS
Passo / Pitch(mm)/ Rastermaß	2,5 mm	3,5 mm 3,81 mm
Poli monoblocco/single mold poles/Polzahl	2÷24	2÷24
Vite / Screw / Schraube		
Corpo isolante / Housing / Gehäuse	PA66, UL 94V0	PA66, UL 94V0
Tensione nominale/Rated Voltage/Nennspannung	130V	250V
Corrente Nominale/Rated Current/Nennstrom	6A	7A
Sezione Nominale/Wire section / Nenn querschnitt	0,5 mm2 26÷20 AWG	1,5 mm2 28÷16 AWG
Temperatura / Temperature / Temperatur	-40°C + 105°C	-40°C + 105°C
Coppia di torsione / Torque / Anzugsdrehmoment		
Lunghezza spellatura/ Stripping lenght/ Abisolierlänge	7 mm	7 mm
VDE		
UL - cUL (file n. E342315)	8A-300V	8A-300V
*Colore standard/ Standard colour/ Standardfarbe	GN(green)	GN(green)
	BK (nero - black) / GY (grigio chiaro/light grey)	BK (nero - black) / GY (grigio chiaro/light grey)

Colori a richiesta/ Colours on request/ Farben auf Anfrage
*= da non specificare sul codice di ordinazione
Do not specify on ordering code
Muss im Bestellcode nicht angegeben werden

Per evitare sbalzi tra i morsetti ed i fori sul c.s. bisogna prevedere una interruzione quando il n. di poli è superiore a 30.

To avoid loss of pitch between terminal block and pcb it is necessary to interrupt the terminal row by poles higher than 30

Die Polzahl sollte maximal 30 betragen damit das Rastermaß von PCB und Leiterplattenklemme noch übereinstimmen

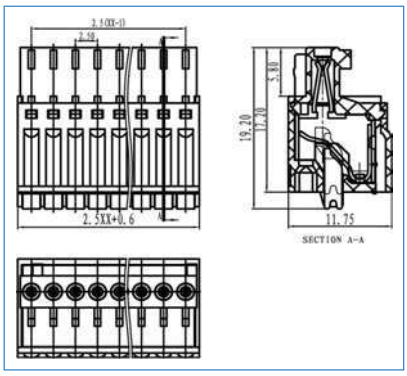

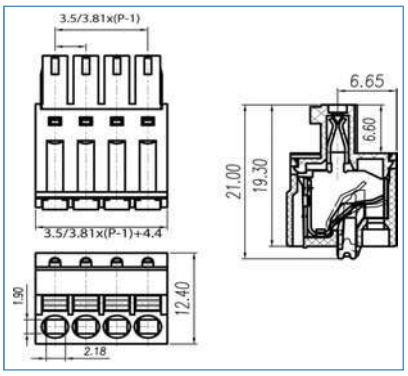

COME ORDINARE
HOW TO ORDER / BESTELLNUMMER

Series	n. poles	pitch	version	color	custom

PASSO / PITCH / RASTERMAẞ

2 POLI	CFS02-2.5	CFS02-3.5	CFS02-3.81
3 POLI	CFS03-2.5	CFS03-3.5	CFS03-3.81
	CFS04-2.5	CFS04-3.5	CFS04-3.81
	CFS05-2.5	CFS05-3.5	CFS05-3.81
	CFS06-2.5	CFS06-3.5	CFS06-3.81
	CFS07-2.5	CFS07-3.5	CFS07-3.81
	CFS08-2.5	CFS08-3.5	CFS08-3.81
	CFS09-2.5	CFS09-3.5	CFS09-3.81
	CFS10-2.5	CFS10-3.5	CFS10-3.81
	CFS11-2.5	CFS11-3.5	CFS11-3.81
	CFS12-2.5	CFS12-3.5	CFS12-3.81
	CFS13-2.5	CFS13-3.5	CFS13-3.81
	CFS14-2.5	CFS14-3.5	CFS14-3.81
	CFS15-2.5	CFS15-3.5	CFS15-3.81
	CFS16-2.5	CFS16-3.5	CFS16-3.81
	CFS17-2.5	CFS17-3.5	CFS17-3.81
	CFS18-2.5	CFS18-3.5	CFS18-3.81
	CFS19-2.5	CFS19-3.5	CFS19-3.81
	CFS20-2.5	CFS20-3.5	CFS20-3.81
	CFS21-2.5	CFS21-3.5	CFS21-3.81
	CFS22-2.5	CFS22-3.5	CFS22-3.81
	CFS23-2.5	CFS23-3.5	CFS23-3.81
24 POLI	CFS24-2.5	CFS24-3.5	CFS24-3.81

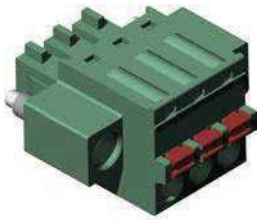

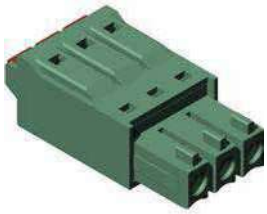

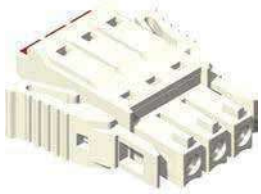

CFS-F	CFSC	CFSC-EJ
3,5 mm 3,81 mm	3,5 mm	3,5 mm
2÷22	2÷24	2÷24
PA66, UL 94V0	PA66, UL 94V0	PA66, UL 94V0
250V	250V	250V
7A	10A	10A
1,5 mm2 28÷16 AWG	1,0 mm2 24÷16 AWG	1,0 mm2 24÷16 AWG
-40°C + 105°C	-40°C + 105°C	-40°C + 105°C
7 mm	9 mm	9 mm
8A-300V	8A-300V	8A-300V
GN(green)	GN(green)	GN(green)
BK (nero - black) / GY (grigio chiaro/light grey)	BK (nero - black) / GY (grigio chiaro/light grey)	BK (nero - black) / GY (grigio chiaro/light grey)

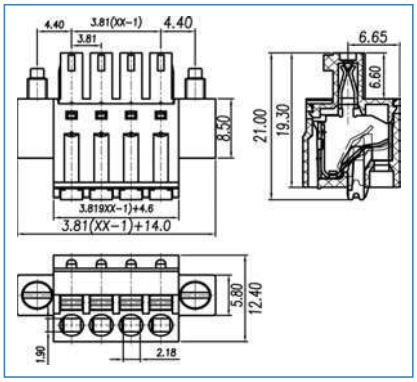

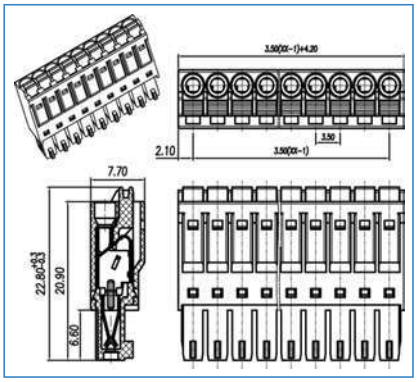

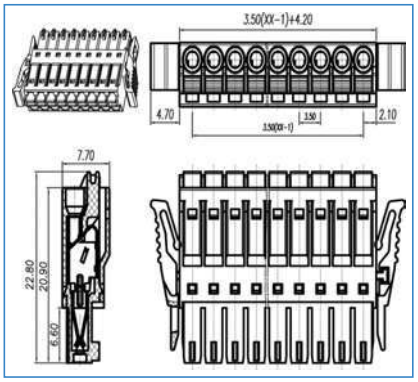

CFS02-3.5-F	CFS02-3.81-F	CFSC02-3.5	CFSC02-3.5-EJ
CFS03-3.5-F	CFS03-3.81-F	CFSC03-3.5	CFSC03-3.5-EJ
CFS04-3.5-F	CFS04-3.81-F	CFSC04-3.5	CFSC04-3.5-EJ
CFS05-3.5-F	CFS05-3.81-F	CFSC05-3.5	CFSC05-3.5-EJ
CFS06-3.5-F	CFS06-3.81-F	CFSC06-3.5	CFSC06-3.5-EJ
CFS07-3.5-F	CFS07-3.81-F	CFSC07-3.5	CFSC07-3.5-EJ
CFS08-3.5-F	CFS08-3.81-F	CFSC08-3.5	CFSC08-3.5-EJ
CFS09-3.5-F	CFS09-3.81-F	CFSC09-3.5	CFSC09-3.5-EJ
CFS10-3.5-F	CFS10-3.81-F	CFSC10-3.5	CFSC10-3.5-EJ
CFS11-3.5-F	CFS11-3.81-F	CFSC11-3.5	CFSC11-3.5-EJ
CFS12-3.5-F	CFS12-3.81-F	CFSC12-3.5	CFSC12-3.5-EJ
CFS13-3.5-F	CFS13-3.81-F	CFSC13-3.5	CFSC13-3.5-EJ
CFS14-3.5-F	CFS14-3.81-F	CFSC14-3.5	CFSC14-3.5-EJ
CFS15-3.5-F	CFS15-3.81-F	CFSC15-3.5	CFSC15-3.5-EJ
CFS16-3.5-F	CFS16-3.81-F	CFSC16-3.5	CFSC16-3.5-EJ
CFS17-3.5-F	CFS17-3.81-F	CFSC17-3.5	CFSC17-3.5-EJ
CFS18-3.5-F	CFS18-3.81-F	CFSC18-3.5	CFSC18-3.5-EJ
CFS19-3.5-F	CFS19-3.81-F	CFSC19-3.5	CFSC19-3.5-EJ
CFS20-3.5-F	CFS20-3.81-F	CFSC20-3.5	CFSC20-3.5-EJ
CFS21-3.5-F	CFS21-3.81-F	CFSC21-3.5	CFSC21-3.5-EJ
CFS22-3.5-F	CFS22-3.81-F	CFSC22-3.5	CFSC22-3.5-EJ
		CFSC23-3.5	CFSC23-3.5-EJ
		CFSC24-3.5	CFSC24-3.5-EJ

euro-block

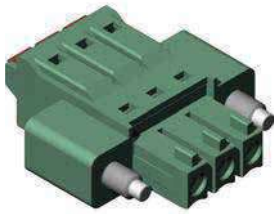

SERIE/PRODUCT SERIES

	CFSC-F	CFS
Passo / Pitch(mm)/ Rastermaß	3,5 mm	5,08 mm
Poli monoblocco/single mold poles/Polzahl	2÷22	2÷24
Vite / Screw / Schraube		
Corpo isolante / Housing / Gehäuse	PA66, UL 94V0	PA66, UL 94V0
Tensione nominale/Rated Voltage/Nennspannung	250V	450V
Corrente Nominale/Rated Current/Nennstrom	10A	20A
Sezione Nominale/Wire section / Nenn querschnitt	1,0 mm2 24÷16 AWG	2,5 mm2 28÷14 AWG
Temperatura / Temperature / Temperatur	-40°C + 105°C	-40°C + 105°C
Coppia di torsione / Torque / Anzugsdrehmoment		
Lunghezza spellatura/ Stripping lenght/ Abisolierlänge	9 mm	7 mm
VDE		
UL - cUL (file n. E342315)	8A-300V	10A-300V
*Colore standard/ Standard colour/ Standardfarbe	GN(green)	GN(green)
	BK (nero - black) / GY (grigio chiaro/light grey)	BK (nero - black) / GY (grigio chiaro/light grey)

Colori a richiesta/ Colours on request/ Farben auf Anfrage
*= da non specificare sul codice di ordinazione
Do not specify on ordering code
Muss im Bestellcode nicht angegeben werden

Per evitare sbalzi tra i morsetti ed i fori sul c.s. bisogna prevedere una interruzione quando il n. di poli è superiore a 30.

To avoid loss of pitch between terminal block and pcb it is necessary to interrupt the terminal row by poles higher than 30

Die Polzahl sollte maximal 30 betragen damit das Rastermaß von PCB und Leiterplattenklemme noch übereinstimmen

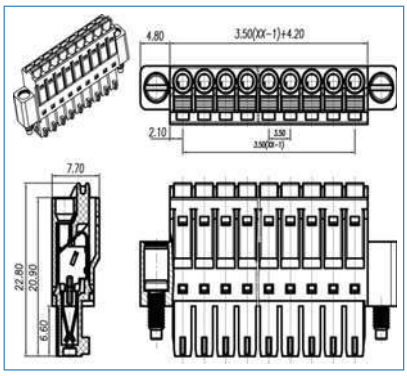

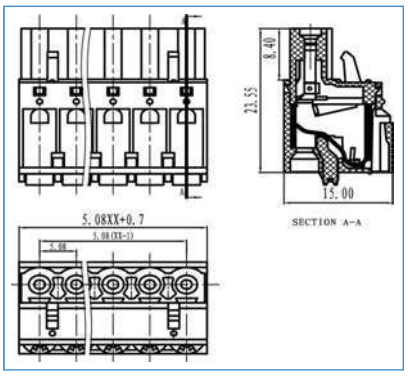

COME ORDINARE
HOW TO ORDER / BESTELLNUMMER

Series	n. poles	pitch	version	color	custom

PASSO / PITCH / RASTERMAẞ

2 POLI	CFSC02-3.5-F	CFS02-5.08
3 POLI	CFSC03-3.5-F	CFS03-5.08
	CFSC04-3.5-F	CFS04-5.08
	CFSC05-3.5-F	CFS05-5.08
	CFSC06-3.5-F	CFS06-5.08
	CFSC07-3.5-F	CFS07-5.08
	CFSC08-3.5-F	CFS08-5.08
	CFSC09-3.5-F	CFS09-5.08
	CFSC10-3.5-F	CFS10-5.08
	CFSC11-3.5-F	CFS11-5.08
	CFSC12-3.5-F	CFS12-5.08
	CFSC13-3.5-F	CFS13-5.08
	CFSC14-3.5-F	CFS14-5.08
	CFSC15-3.5-F	CFS15-5.08
	CFSC16-3.5-F	CFS16-5.08
	CFSC17-3.5-F	CFS17-5.08
	CFSC18-3.5-F	CFS18-5.08
	CFSC19-3.5-F	CFS19-5.08
	CFSC20-3.5-F	CFS20-5.08
	CFSC21-3.5-F	CFS21-5.08
	CFSC22-3.5-F	CFS22-5.08
		CFS23-5.08
24 POLI		CFS24-5.08

CFS-F

5,08 mm
2÷22
PA66, UL 94V0
450V
20A
2,5 mm2 28÷14 AWG
-40°C + 105°C
7 mm
10A-300V
GN(green)
BK (nero - black) / GY (grigio chiaro/light grey)

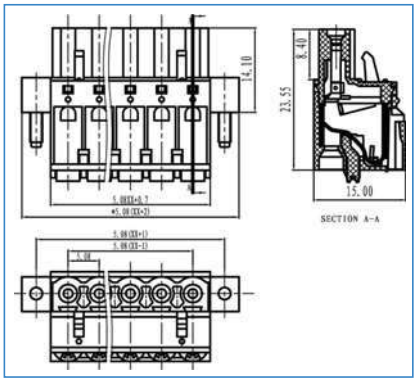

CCM-CV

2,5 mm
2÷24
PA66, UL 94V0
130V
6A
-40°C + 105°C
5A-150V
GN(green)
BK (nero - black) / GY (grigio chiaro/light grey)

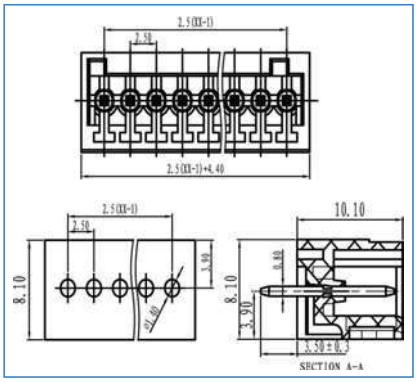

CCM-CH

2,5 mm
2÷24
PA66, UL 94V0
130V
6A
-40°C + 105°C
5A-150V
GN(green)
BK (nero - black) / GY (grigio chiaro/light grey)

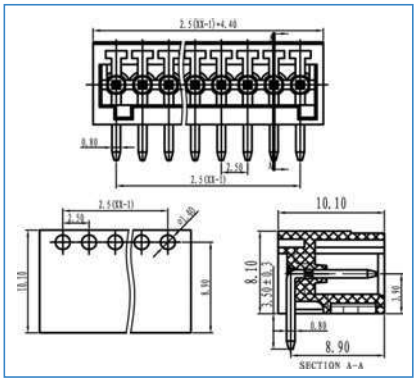

CFS-F	CCM-CV	CCM-CH
CFS02-5.08-F	CCM02-2.5-CV	CCM02-2.5-CH
CFS03-5.08-F	CCM03-2.5-CV	CCM03-2.5-CH
CFS04-5.08-F	CCM04-2.5-CV	CCM04-2.5-CH
CFS05-5.08-F	CCM05-2.5-CV	CCM05-2.5-CH
CFS06-5.08-F	CCM06-2.5-CV	CCM06-2.5-CH
CFS07-5.08-F	CCM07-2.5-CV	CCM07-2.5-CH
CFS08-5.08-F	CCM08-2.5-CV	CCM08-2.5-CH
CFS09--5.08-F	CCM09-2.5-CV	CCM09-2.5-CH
CFS10-5.08-F	CCM10-2.5-CV	CCM10-2.5-CH
CFS11-5.08-F	CCM11-2.5-CV	CCM11-2.5-CH
CFS12-5.08-F	CCM12-2.5-CV	CCM12-2.5-CH
CFS13-5.08-F	CCM13-2.5-CV	CCM13-2.5-CH
CFS14-5.08-F	CCM14-2.5-CV	CCM14-2.5-CH
CFS15-5.08-F	CCM15-2.5-CV	CCM15-2.5-CH
CFS16-5.08-F	CCM16-2.5-CV	CCM16-2.5-CH
CFS17-5.08-F	CCM17-2.5-CV	CCM17-2.5-CH
CFS18-5.08-F	CCM18-2.5-CV	CCM18-2.5-CH
CFS19-5.08-F	CCM19-2.5-CV	CCM19-2.5-CH
CFS20-5.08-F	CCM20-2.5-CV	CCM20-2.5-CH
CFS21-5.08-F	CCM21-2.5-CV	CCM21-2.5-CH
CFS22-5.08-F	CCM22-2.5-CV	CCM22-2.5-CH
	CCM23-2.5-CV	CCM23-2.5-CH
	CCM24-2.5-CV	CCM24-2.5-CH

euro-block

SERIE/PRODUCT SERIES

	CCM-CV		CCM-CH	
Passo / Pitch(mm)/ Rastermaß	3,5 mm	3,81 mm	3,5 mm	3,81 mm
Poli monoblocco/single mold poles/Polzahl	2÷24		2÷24	
Vite / Screw / Schraube				
Corpo isolante / Housing / Gehäuse	PA66, UL 94V0		PA66, UL 94V0	
Tensione nominale/Rated Voltage/Nennspannung	250V		250V	
Corrente Nominale/Rated Current/Nennstrom	7A		7A	
Sezione Nominale/Wire section / Nenn querschnitt				
Temperatura / Temperature / Temperatur	-40°C + 105°C		-40°C + 105°C	
Coppia di torsione / Torque / Anzugsdrehmoment				
Lunghezza spellatura/ Stripping lenght/ Abisolierlänge				
VDE	7A-250V		7A-250V	
UL - cUL (file n. E342315)	8A-300V		8A-300V	
*Colore standard/ Standard colour/ Standardfarbe	GN(green)		GN(green)	
	BK (nero - black) / GY (grigio chiaro/light grey)		BK (nero - black) / GY (grigio chiaro/light grey)	

Colori a richiesta/ Colours on request/ Farben auf Anfrage
*= da non specificare sul codice di ordinazione
Do not specify on ordering code
Muss im Bestellcode nicht angegeben werden

Per evitare sbalzi tra i morsetti ed i fori sul c.s. bisogna prevedere una interruzione quando il n. di poli è superiore a 30.

To avoid loss of pitch between terminal block and pcb it is necessary to interrupt the terminal row by poles higher than 30

Die Polzahl sollte maximal 30 betragen damit das Rastermaß von PCB und Leiterplattenklemme noch übereinstimmen

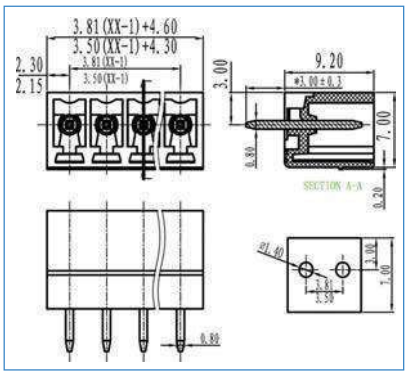

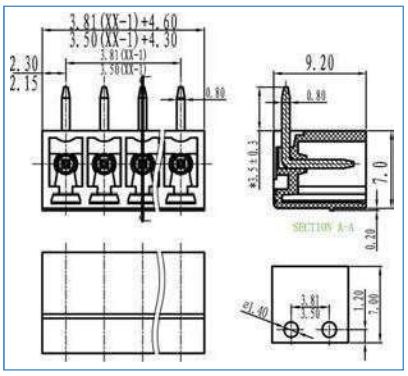

COME ORDINARE
HOW TO ORDER / BESTELLNUMMER

Series	n. poles	pitch	version	color	custom

PASSO / PITCH / RASTERMAẞ

2 POLI	CCM02-3.5-CV	CCM02-3.81-CV	CCM02-3.5-CH	CCM02-3.81-CH
3 POLI	CCM03-3.5-CV	CCM03-3.81-CV	CCM03-3.5-CH	CCM03-3.81-CH
	CCM04-3.5-CV	CCM04-3.81-CV	CCM04-3.5-CH	CCM04-3.81-CH
	CCM05-3.5-CV	CCM05-3.81-CV	CCM05-3.5-CH	CCM05-3.81-CH
	CCM06-3.5-CV	CCM06-3.81-CV	CCM06-3.5-CH	CCM06-3.81-CH
	CCM07-3.5-CV	CCM07-3.81-CV	CCM07-3.5-CH	CCM07-3.81-CH
	CCM08-3.5-CV	CCM08-3.81-CV	CCM08-3.5-CH	CCM08-3.81-CH
	CCM09-3.5-CV	CCM09-3.81-CV	CCM09-3.5-CH	CCM09-3.81-CH
	CCM10-3.5-CV	CCM10-3.81-CV	CCM10-3.5-CH	CCM10-3.81-CH
	CCM11-3.5-CV	CCM11-3.81-CV	CCM11-3.5-CH	CCM11-3.81-CH
	CCM12-3.5-CV	CCM12-3.81-CV	CCM12-3.5-CH	CCM12-3.81-CH
	CCM13-3.5-CV	CCM13-3.81-CV	CCM13-3.5-CH	CCM13-3.81-CH
	CCM14-3.5-CV	CCM14-3.81-CV	CCM14-3.5-CH	CCM14-3.81-CH
	CCM15-3.5-CV	CCM15-3.81-CV	CCM15-3.5-CH	CCM15-3.81-CH
	CCM16-3.5-CV	CCM16-3.81-CV	CCM16-3.5-CH	CCM16-3.81-CH
	CCM17-3.5-CV	CCM17-3.81-CV	CCM17-3.5-CH	CCM17-3.81-CH
	CCM18-3.5-CV	CCM18-3.81-CV	CCM18-3.5-CH	CCM18-3.81-CH
	CCM19-3.5-CV	CCM19-3.81-CV	CCM19-3.5-CH	CCM19-3.81-CH
	CCM20-3.5-CV	CCM20-3.81-CV	CCM20-3.5-CH	CCM20-3.81-CH
	CCM21-3.5-CV	CCM21-3.81-CV	CCM21-3.5-CH	CCM21-3.81-CH
	CCM22-3.5-CV	CCM22-3.81-CV	CCM22-3.5-CH	CCM22-3.81-CH
	CCM23-3.5-CV	CCM23-3.81-CV	CCM23-3.5-CH	CCM23-3.81-CH
24 POLI	CCM24-3.5-CV	CCM24-3.81-CV	CCM24-3.5-CH	CCM24-3.81-CH

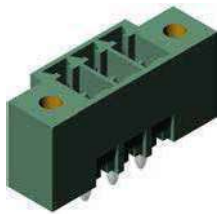

CCM-VF

3,5 mm	3,81 mm
2÷22	
PA66, UL 94V0	
250V	
7A	
-40°C + 105°C	
7A-250V	
8A-300V	
GN(green)	
BK (nero - black) / GY (grigio chiaro/light grey)	

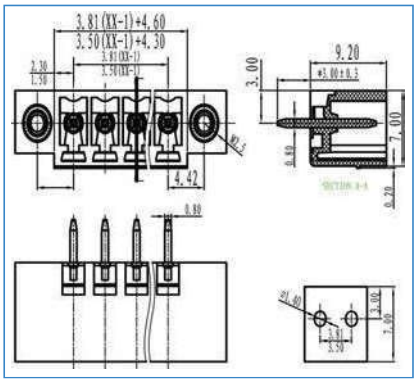

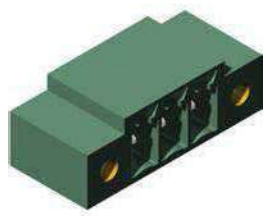

CCM-HF

3,5 mm	3,81 mm
2÷22	
PA66, UL 94V0	
250V	
7A	
-40°C + 105°C	
7A-250V	
8A-300V	
GN(green)	
BK (nero - black) / GY (grigio chiaro/light grey)	

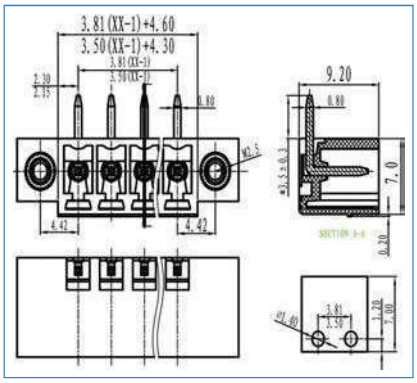

CCM-V

5 mm	5,08 mm
2÷24	
PA66, UL 94V0	
450V	
20A	
-40°C + 105°C	
10A-320V	
15A-300V	
GN(green)	
BK (nero - black) / GY (grigio chiaro/light grey)	

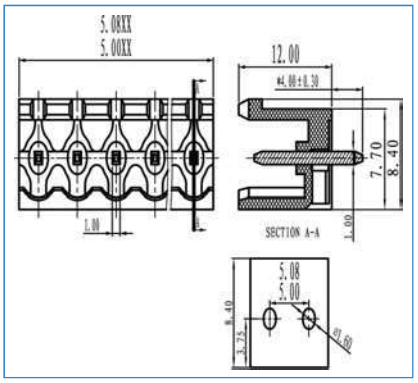

CCM02-3.5-VF	CCM02-3.81-VF	CCM02-3.5-HF	CCM02-3.81-HF	CCM02-5-V	CCM02-5.08-V
CCM03-3.5-VF	CCM03-3.81-VF	CCM03-3.5-HF	CCM03-3.81-HF	CCM03-5-V	CCM03-5.08-V
CCM04-3.5-VF	CCM04-3.81-VF	CCM04-3.5-HF	CCM04-3.81-HF	CCM04-5-V	CCM04-5.08-V
CCM05-3.5-VF	CCM05-3.81-VF	CCM05-3.5-HF	CCM05-3.81-HF	CCM05-5-V	CCM05-5.08-V
CCM06-3.5-VF	CCM06-3.81-VF	CCM06-3.5-HF	CCM06-3.81-HF	CCM06-5-V	CCM06-5.08-V
CCM07-3.5-VF	CCM07-3.81-VF	CCM07-3.5-HF	CCM07-3.81-HF	CCM07-5-V	CCM07-5.08-V
CCM08-3.5-VF	CCM08-3.81-VF	CCM08-3.5-HF	CCM08-3.81-HF	CCM08-5-V	CCM08-5.08-V
CCM09-3.5-VF	CCM09-3.81-VF	CCM09-3.5-HF	CCM09-3.81-HF	CCM09-5-V	CCM09-5.08-V
CCM10-3.5-VF	CCM10-3.81-VF	CCM10-3.5-HF	CCM10-3.81-HF	CCM10-5-V	CCM10-5.08-V
CCM11-3.5-VF	CCM11-3.81-VF	CCM11-3.5-HF	CCM11-3.81-HF	CCM11-5-V	CCM11-5.08-V
CCM12-3.5-VF	CCM12-3.81-VF	CCM12-3.5-HF	CCM12-3.81-HF	CCM12-5-V	CCM12-5.08-V
CCM13-3.5-VF	CCM13-3.81-VF	CCM13-3.5-HF	CCM13-3.81-HF	CCM13-5-V	CCM13-5.08-V
CCM14-3.5-VF	CCM14-3.81-VF	CCM14-3.5-HF	CCM14-3.81-HF	CCM14-5-V	CCM14-5.08-V
CCM15-3.5-VF	CCM15-3.81-VF	CCM15-3.5-HF	CCM15-3.81-HF	CCM15-5-V	CCM15-5.08-V
CCM16-3.5-VF	CCM16-3.81-VF	CCM16-3.5-HF	CCM16-3.81-HF	CCM16-5-V	CCM16-5.08-V
CCM17-3.5-VF	CCM17-3.81-VF	CCM17-3.5-HF	CCM17-3.81-HF	CCM17-5-V	CCM17-5.08-V
CCM18-3.5-VF	CCM18-3.81-VF	CCM18-3.5-HF	CCM18-3.81-HF	CCM18-5-V	CCM18-5.08-V
CCM19-3.5-VF	CCM19-3.81-VF	CCM19-3.5-HF	CCM19-3.81-HF	CCM19-5-V	CCM19-5.08-V
CCM20-3.5-VF	CCM20-3.81-VF	CCM20-3.5-HF	CCM20-3.81-HF	CCM20-5-V	CCM20-5.08-V
CCM21-3.5-VF	CCM21-3.81-VF	CCM21-3.5-HF	CCM21-3.81-HF	CCM21-5-V	CCM21-5.08-V
CCM22-3.5-VF	CCM22-3.81-VF	CCM22-3.5-HF	CCM22-3.81-HF	CCM22-5-V	CCM22-5.08-V
				CCM23-5-V	CCM23-5.08-V
				CCM24-5-V	CCM24-5.08-V

euro-block

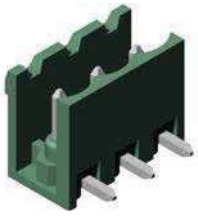

SERIE/PRODUCT SERIES

	CCM-H		CCM-CV	
Passo / Pitch(mm)/ Rastermaß	5 mm	5,08 mm	5 mm	5,08 mm
Poli monoblocco/single mold poles/Polzahl	2÷24		2÷24	
Vite / Screw / Schraube				
Corpo isolante / Housing / Gehäuse	PA66, UL 94V0		PA66, UL 94V0	
Tensione nominale/Rated Voltage/Nennspannung	450V		450V	
Corrente Nominale/Rated Current/Nennstrom	20A		20A	
Sezione Nominale/Wire section / Nenn querschnitt				
Temperatura / Temperature / Temperatur	-40°C + 105°C		-40°C + 105°C	
Coppia di torsione / Torque / Anzugsdrehmoment				
Lunghezza spellatura/ Stripping lenght/ Abisolierlänge				
VDE	10A-320V		10A-320V	
UL - cUL (file n. E342315)	15A-300V		15A-300V	
*Colore standard/ Standard colour/ Standardfarbe	GN(green)		GN(green)	
	BK (nero - black) / GY (grigio chiaro/light grey)		BK (nero - black) / GY (grigio chiaro/light grey)	

Colori a richiesta/ Colours on request/ Farben auf Anfrage
*= da non specificare sul codice di ordinazione
Do not specify on ordering code
Muss im Bestellcode nicht angegeben werden

Per evitare sbalzi tra i morsetti ed i fori sul c.s. bisogna prevedere una interruzione quando il n. di poli è superiore a 30.

To avoid loss of pitch between terminal block and pcb it is necessary to interrupt the terminal row by poles higher than 30

Die Polzahl sollte maximal 30 betragen damit das Rastermaß von PCB und Leiterplattenklemme noch übereinstimmen

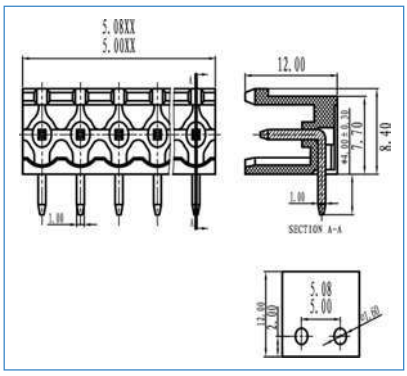

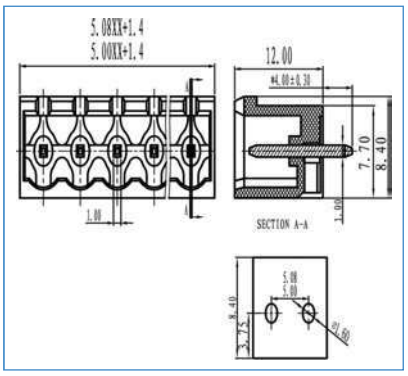

COME ORDINARE
HOW TO ORDER / BESTELLNUMMER

Series	n. poles	pitch	version	color	custom

PASSO / PITCH / RASTERMAẞ

2 POLI	CCM02-5-H	CCM02-5.08-H	CCM02-5-CV	CCM02-5.08-CV
3 POLI	CCM03-5-H	CCM03-5.08-H	CCM03-5-CV	CCM03-5.08-CV
	CCM04-5-H	CCM04-5.08-H	CCM04-5-CV	CCM04-5.08-CV
	CCM05-5-H	CCM05-5.08-H	CCM05-5-CV	CCM05-5.08-CV
	CCM06-5-H	CCM06-5.08-H	CCM06-5-CV	CCM06-5.08-CV
	CCM07-5-H	CCM07-5.08-H	CCM07-5-CV	CCM07-5.08-CV
	CCM08-5-H	CCM08-5.08-H	CCM08-5-CV	CCM08-5.08-CV
	CCM09-5-H	CCM09-5.08-H	CCM09-5-CV	CCM09-5.08-CV
	CCM10-5-H	CCM10-5.08-H	CCM10-5-CV	CCM10-5.08-CV
	CCM11-5-H	CCM11-5.08-H	CCM11-5-CV	CCM11-5.08-CV
	CCM12-5-H	CCM12-5.08-H	CCM12-5-CV	CCM12-5.08-CV
	CCM13-5-H	CCM13-5.08-H	CCM13-5-CV	CCM13-5.08-CV
	CCM14-5-H	CCM14-5.08-H	CCM14-5-CV	CCM14-5.08-CV
	CCM15-5-H	CCM15-5.08-H	CCM15-5-CV	CCM15-5.08-CV
	CCM16-5-H	CCM16-5.08-H	CCM16-5-CV	CCM16-5.08-CV
	CCM17-5-H	CCM17-5.08-H	CCM17-5-CV	CCM17-5.08-CV
	CCM18-5-H	CCM18-5.08-H	CCM18-5-CV	CCM18-5.08-CV
	CCM19-5-H	CCM19-5.08-H	CCM19-5-CV	CCM19-5.08-CV
	CCM20-5-H	CCM20-5.08-H	CCM20-5-CV	CCM20-5.08-CV
	CCM21-5-H	CCM21-5.08-H	CCM21-5-CV	CCM21-5.08-CV
	CCM22-5-H	CCM22-5.08-H	CCM22-5-CV	CCM22-5.08-CV
	CCM23-5-H	CCM23-5.08-H	CCM23-5-CV	CCM23-5.08-CV
24 POLI	CCM24-5-H	CCM24-5.08-H	CCM24-5-CV	CCM24-5.08-CV

CCM-CH

5 mm	5,08 mm
2÷24	
PA66, UL 94V0	
450V	
20A	
-40°C + 105°C	
10A-320V	
15A-300V	
GN(green)	
BK (nero - black) / GY (grigio chiaro/light grey)	

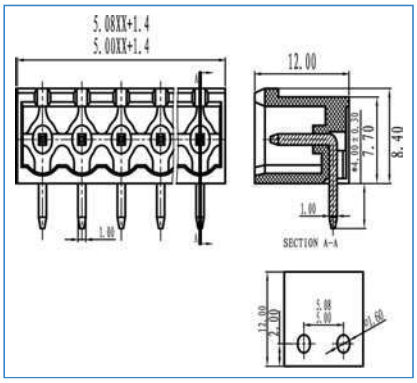

CCM-V

7,5 mm	7,62 mm
2÷24	
PA66, UL 94V0	
450V	
20A	
-40°C + 105°C	
	10A-400V
15A-300V	
GN(green)	
BK (nero - black) / GY (grigio chiaro/light grey)	

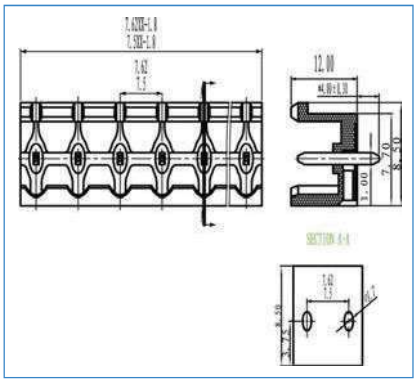

CCM-H

7,5 mm	7,62 mm
2÷24	
PA66, UL 94V0	
450V	
20A	
-40°C + 105°C	
	10A-400V
15A-300V	
GN(green)	
BK (nero - black) / GY (grigio chiaro/light grey)	

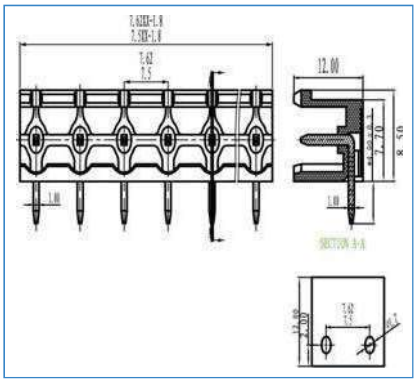

CCM02-5-CH	CCM02-5.08-CH	CCM02-7.5-V	CCM02-7.62-V	CCM02-7.5-H	CCM02-7.62-H
CCM03-5-CH	CCM03-5.08-CH	CCM03-7.5-V	CCM03-7.62-V	CCM03-7.5-H	CCM03-7.62-H
CCM04-5-CH	CCM04-5.08-CH	CCM04-7.5-V	CCM04-7.62-V	CCM04-7.5-H	CCM04-7.62-H
CCM05-5-CH	CCM05-5.08-CH	CCM05-7.5-V	CCM05-7.62-V	CCM05-7.5-H	CCM05-7.62-H
CCM06-5-CH	CCM06-5.08-CH	CCM06-7.5-V	CCM06-7.62-V	CCM06-7.5-H	CCM06-7.62-H
CCM07-5-CH	CCM07-5.08-CH	CCM07-7.5-V	CCM07-7.62-V	CCM07-7.5-H	CCM07-7.62-H
CCM08-5-CH	CCM08-5.08-CH	CCM08-7.5-V	CCM08-7.62-V	CCM08-7.5-H	CCM08-7.62-H
CCM09-5-CH	CCM09-5.08-CH	CCM09-7.5-V	CCM09-7.62-V	CCM09-7.5-H	CCM09-7.62-H
CCM10-5-CH	CCM10-5.08-CH	CCM10-7.5-V	CCM10-7.62-V	CCM10-7.5-H	CCM10-7.62-H
CCM11-5-CH	CCM11-5.08-CH	CCM11-7.5-V	CCM11-7.62-V	CCM11-7.5-H	CCM11-7.62-H
CCM12-5-CH	CCM12-5.08-CH	CCM12-7.5-V	CCM12-7.62-V	CCM12-7.5-H	CCM12-7.62-H
CCM13-5-CH	CCM13-5.08-CH	CCM13-7.5-V	CCM13-7.62-V	CCM13-7.5-H	CCM13-7.62-H
CCM14-5-CH	CCM14-5.08-CH	CCM14-7.5-V	CCM14-7.62-V	CCM14-7.5-H	CCM14-7.62-H
CCM15-5-CH	CCM15-5.08-CH	CCM15-7.5-V	CCM15-7.62-V	CCM15-7.5-H	CCM15-7.62-H
CCM16-5-CH	CCM16-5.08-CH	CCM16-7.5-V	CCM16-7.62-V	CCM16-7.5-H	CCM16-7.62-H
CCM17-5-CH	CCM17-5.08-CH	CCM17-7.5-V	CCM17-7.62-V	CCM17-7.5-H	CCM17-7.62-H
CCM18-5-CH	CCM18-5.08-CH	CCM18-7.5-V	CCM18-7.62-V	CCM18-7.5-H	CCM18-7.62-H
CCM19-5-CH	CCM19-5.08-CH	CCM19-7.5-V	CCM19-7.62-V	CCM19-7.5-H	CCM19-7.62-H
CCM20-5-CH	CCM20-5.08-CH	CCM20-7.5-V	CCM20-7.62-V	CCM20-7.5-H	CCM20-7.62-H
CCM21-5-CH	CCM21-5.08-CH	CCM21-7.5-V	CCM21-7.62-V	CCM21-7.5-H	CCM21-7.62-H
CCM22-5-CH	CCM22-5.08-CH	CCM22-7.5-V	CCM22-7.62-V	CCM22-7.5-H	CCM22-7.62-H
CCM23-5-CH	CCM23-5.08-CH	CCM23-7.5-V	CCM23-7.62-V	CCM23-7.5-H	CCM23-7.62-H
CCM24-5-CH	CCM24-5.08-CH	CCM24-7.5-V	CCM24-7.62-V	CCM24-7.5-H	CCM24-7.62-H

euro-block

SERIE/PRODUCT SERIES

	CCM-CV		CCM-CH	
Passo / Pitch(mm)/ Rastermaß	7,5 mm	7,62 mm	7,5 mm	7,62 mm
Poli monoblocco/single mold poles/Polzahl	2÷24		2÷24	
Vite / Screw / Schraube				
Corpo isolante / Housing / Gehäuse	PA66, UL 94V0		PA66, UL 94V0	
Tensione nominale/Rated Voltage/Nennspannung	450V		450V	
Corrente Nominale/Rated Current/Nennstrom	20A		20A	
Sezione Nominale/Wire section / Nenn querschnitt				
Temperatura / Temperature / Temperatur	-40°C + 105°C		-40°C + 105°C	
Coppia di torsione / Torque / Anzugsdrehmoment				
Lunghezza spellatura/ Stripping lenght/ Abisolierlänge				
VDE		10A-400V		10A-400V
UL - cUL (file n. E342315)	15A-300V		15A-300V	
*Colore standard/ Standard colour/ Standardfarbe	GN(green)		GN(green)	
	BK (nero - black) / GY (grigio chiaro/light grey)		BK (nero - black) / GY (grigio chiaro/light grey)	

Colori a richiesta/ Colours on request/ Farben auf Anfrage
*= da non specificare sul codice di ordinazione
Do not specify on ordering code
Muss im Bestellcode nicht angegeben werden

Per evitare sbalzi tra i morsetti ed i fori sul c.s. bisogna prevedere una interruzione quando il n. di poli è superiore a 30.

To avoid loss of pitch between terminal block and pcb it is necessary to interrupt the terminal row by poles higher than 30

Die Polzahl sollte maximal 30 betragen damit das Rastermaß von PCB und Leiterplattenklemme noch übereinstimmen

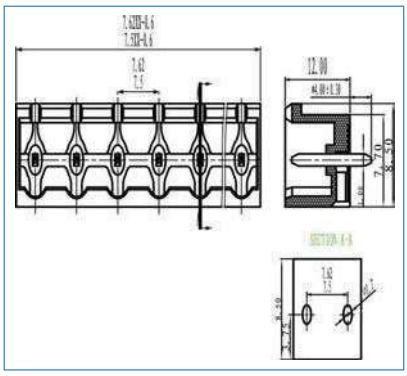

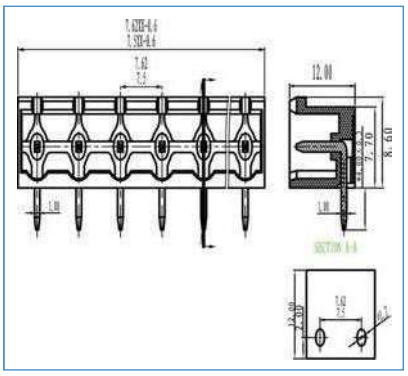

COME ORDINARE
HOW TO ORDER / BESTELLNUMMER

Series	n. poles	pitch	version	color	custom

PASSO / PITCH / RASTERMAẞ

2 POLI	CCM02-7.5-CV	CCM02-7.62-CV	CCM02-7.5-CH	CCM02-7.62-CH
3 POLI	CCM03-7.5-CV	CCM03-7.62-CV	CCM03-7.5-CH	CCM03-7.62-CH
	CCM04-7.5-CV	CCM04-7.62-CV	CCM04-7.5-CH	CCM04-7.62-CH
	CCM05-7.5-CV	CCM05-7.62-CV	CCM05-7.5-CH	CCM05-7.62-CH
	CCM06-7.5-CV	CCM06-7.62-CV	CCM06-7.5-CH	CCM06-7.62-CH
	CCM07-7.5-CV	CCM07-7.62-CV	CCM07-7.5-CH	CCM07-7.62-CH
	CCM08-7.5-CV	CCM08-7.62-CV	CCM08-7.5-CH	CCM08-7.62-CH
	CCM09-7.5-CV	CCM09-7.62-CV	CCM09-7.5-CH	CCM09-7.62-CH
	CCM10-7.5-CV	CCM10-7.62-CV	CCM10-7.5-CH	CCM10-7.62-CH
	CCM11-7.5-CV	CCM11-7.62-CV	CCM11-7.5-CH	CCM11-7.62-CH
	CCM12-7.5-CV	CCM12-7.62-CV	CCM12-7.5-CH	CCM12-7.62-CH
	CCM13-7.5-CV	CCM13-7.62-CV	CCM13-7.5-CH	CCM13-7.62-CH
	CCM14-7.5-CV	CCM14-7.62-CV	CCM14-7.5-CH	CCM14-7.62-CH
	CCM15-7.5-CV	CCM15-7.62-CV	CCM15-7.5-CH	CCM15-7.62-CH
	CCM16-7.5-CV	CCM16-7.62-CV	CCM16-7.5-CH	CCM16-7.62-CH
	CCM17-7.5-CV	CCM17-7.62-CV	CCM17-7.5-CH	CCM17-7.62-CH
	CCM18-7.5-CV	CCM18-7.62-CV	CCM18-7.5-CH	CCM18-7.62-CH
	CCM19-7.5-CV	CCM19-7.62-CV	CCM19-7.5-CH	CCM19-7.62-CH
	CCM20-7.5-CV	CCM20-7.62-CV	CCM20-7.5-CH	CCM20-7.62-CH
	CCM21-7.5-CV	CCM21-7.62-CV	CCM21-7.5-CH	CCM21-7.62-CH
	CCM22-7.5-CV	CCM22-7.62-CV	CCM22-7.5-CH	CCM22-7.62-CH
	CCM23-7.5-CV	CCM23-7.62-CV	CCM23-7.5-CH	CCM23-7.62-CH
24 POLI	CCM24-7.5-CV	CCM24-7.62-CV	CCM24-7.5-CH	CCM24-7.62-CH

CCM-VF

5 mm	5,08 mm
2÷22	
PA66, UL 94V0	
450V	
20A	
-40°C + 105°C	
10A-320V	
15A-300V	
GN(green)	
BK (nero - black) / GY (grigio chiaro/light grey)	

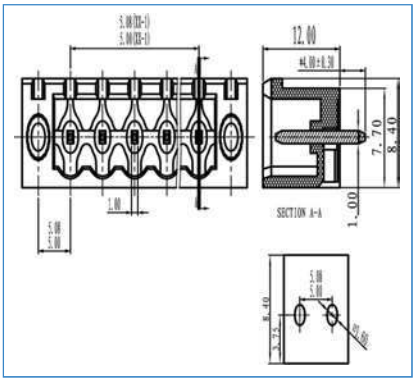

CCM-HF

5 mm	5,08 mm
2÷22	
PA66, UL 94V0	
450V	
20A	
-40°C + 105°C	
10A-320V	
15A-300V	
GN(green)	
BK (nero - black) / GY (grigio chiaro/light grey)	

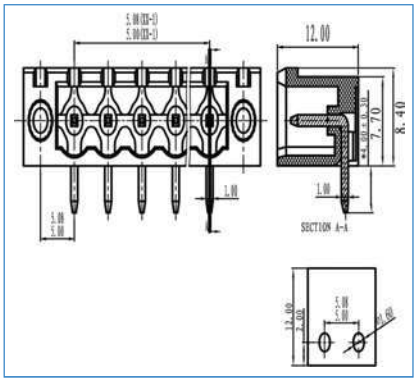

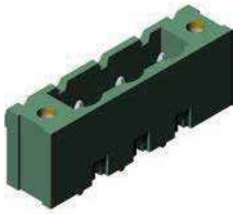

CCM-VF

7,5 mm	7,62 mm
2÷22	
PA66, UL 94V0	
450V	
20A	
-40°C + 105°C	
	10A-400V
15A-300V	
GN(green)	
BK (nero - black) / GY (grigio chiaro/light grey)	

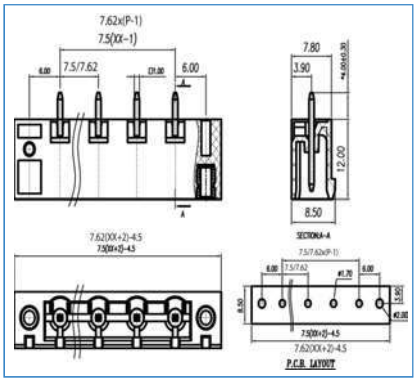

CCM02-5-VF	CCM02-5.08-VF	CCM02-5-HF	CCM02-5.08-HF	CCM02-7.5-VF	CCM02-7.62-VF
CCM03-5-VF	CCM03-5.08-VF	CCM03-5-HF	CCM03-5.08-HF	CCM03-7.5-VF	CCM03-7.62-VF
CCM04-5-VF	CCM04-5.08-VF	CCM04-5-HF	CCM04-5.08-HF	CCM04-7.5-VF	CCM04-7.62-VF
CCM05-5-VF	CCM05-5.08-VF	CCM05-5-HF	CCM05-5.08-HF	CCM05-7.5-VF	CCM05-7.62-VF
CCM06-5-VF	CCM06-5.08-VF	CCM06-5-HF	CCM06-5.08-HF	CCM06-7.5-VF	CCM06-7.62-VF
CCM07-5-VF	CCM07-5.08-VF	CCM07-5-HF	CCM07-5.08-HF	CCM07-7.5-VF	CCM07-7.62-VF
CCM08-5-VF	CCM08-5.08-VF	CCM08-5-HF	CCM08-5.08-HF	CCM08-7.5-VF	CCM08-7.62-VF
CCM09-5-VF	CCM09-5.08-VF	CCM09-5-HF	CCM09-5.08-HF	CCM09-7.5-VF	CCM09-7.62-VF
CCM10-5-VF	CCM10-5.08-VF	CCM10-5-HF	CCM10-5.08-HF	CCM10-7.5-VF	CCM10-7.62-VF
CCM11-5-VF	CCM11-5.08-VF	CCM11-5-HF	CCM11-5.08-HF	CCM11-7.5-VF	CCM11-7.62-VF
CCM12-5-VF	CCM12-5.08-VF	CCM12-5-HF	CCM12-5.08-HF	CCM12-7.5-VF	CCM12-7.62-VF
CCM13-5-VF	CCM13-5.08-VF	CCM13-5-HF	CCM13-5.08-HF	CCM13-7.5-VF	CCM13-7.62-VF
CCM14-5-VF	CCM14-5.08-VF	CCM14-5-HF	CCM14-5.08-HF	CCM14-7.5-VF	CCM14-7.62-VF
CCM15-5-VF	CCM15-5.08-VF	CCM15-5-HF	CCM15-5.08-HF	CCM15-7.5-VF	CCM15-7.62-VF
CCM16-5-VF	CCM16-5.08-VF	CCM16-5-HF	CCM16-5.08-HF	CCM16-7.5-VF	CCM16-7.62-VF
CCM17-5-VF	CCM17-5.08-VF	CCM17-5-HF	CCM17-5.08-HF	CCM17-7.5-VF	CCM17-7.62-VF
CCM18-5-VF	CCM18-5.08-VF	CCM18-5-HF	CCM18-5.08-HF	CCM18-7.5-VF	CCM18-7.62-VF
CCM19-5-VF	CCM19-5.08-VF	CCM19-5-HF	CCM19-5.08-HF	CCM19-7.5-VF	CCM19-7.62-VF
CCM20-5-VF	CCM20-5.08-VF	CCM20-5-HF	CCM20-5.08-HF	CCM20-7.5-VF	CCM20-7.62-VF
CCM21-5-VF	CCM21-5.08-VF	CCM21-5-HF	CCM21-5.08-HF	CCM21-7.5-VF	CCM21-7.62-VF
CCM22-5-VF	CCM22-5.08-VF	CCM22-5-HF	CCM22-5.08-HF	CCM22-7.5-VF	CCM22-7.62-VF

euro-block

SERIE/PRODUCT SERIES

	CCM-HF		CMI
Passo / Pitch(mm)/ Rastermaß	7,5 mm	7,62 mm	5,08 mm
Poli monoblocco/single mold poles/Polzahl	2÷22		2÷24
Vite / Screw / Schraube			
Corpo isolante / Housing / Gehäuse	PA66, UL 94V0		PA66, UL 94V0
Tensione nominale/Rated Voltage/Nennspannung	450V		450V
Corrente Nominale/Rated Current/Nennstrom	20A		20A
Sezione Nominale/Wire section / Nenn querschnitt			
Temperatura / Temperature / Temperatur	-40°C + 105°C		-40°C + 105°C
Coppia di torsione / Torque / Anzugsdrehmoment			
Lunghezza spellatura/ Stripping lenght/ Abisolierlänge			
VDE		10A-400V	
UL - cUL (file n. E342315)	15A-300V		15A-300V
*Colore standard/ Standard colour/ Standardfarbe	GN(green)		GN(green)
	BK (nero - black) / GY (grigio chiaro/light grey)		BK (nero - black) / GY (grigio chiaro/light grey)

Colori a richiesta/ Colours on request/ Farben auf Anfrage
*= da non specificare sul codice di ordinazione
Do not specify on ordering code
Muss im Bestellcode nicht angegeben werden

Per evitare sbalzi tra i morsetti ed i fori sul c.s. bisogna prevedere una interruzione quando il n. di poli è superiore a 30.

To avoid loss of pitch between terminal block and pcb it is necessary to interrupt the terminal row by poles higher than 30

Die Polzahl sollte maximal 30 betragen damit das Rastermaß von PCB und Leiterplattenklemme noch übereinstimmen

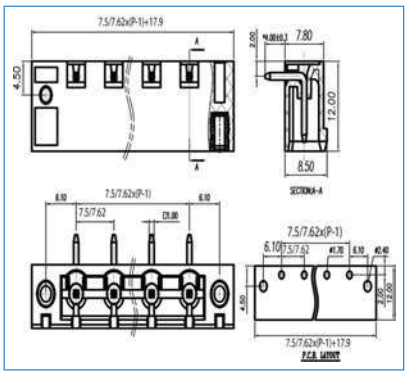

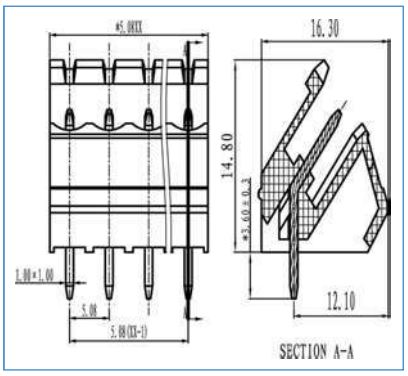

COME ORDINARE
HOW TO ORDER / BESTELLNUMMER

Series	n. poles	pitch	version	color	custom

PASSO / PITCH / RASTERMAẞ

2 POLI	CCM02-7.5-HF	CCM02-7.62-HF	CMI02-5.08
3 POLI	CCM03-7.5-HF	CCM03-7.62-HF	CMI03-5.08
	CCM04-7.5-HF	CCM04-7.62-HF	CMI04-5.08
	CCM05-7.5-HF	CCM05-7.62-HF	CMI05-5.08
	CCM06-7.5-HF	CCM06-7.62-HF	CMI06-5.08
	CCM07-7.5-HF	CCM07-7.62-HF	CMI07-5.08
	CCM08-7.5-HF	CCM08-7.62-HF	CMI08-5.08
	CCM09-7.5-HF	CCM09-7.62-HF	CMI09-5.08
	CCM10-7.5-HF	CCM10-7.62-HF	CMI10-5.08
	CCM11-7.5-HF	CCM11-7.62-HF	CMI11-5.08
	CCM12-7.5-HF	CCM12-7.62-HF	CMI12-5.08
	CCM13-7.5-HF	CCM13-7.62-HF	CMI13-5.08
	CCM14-7.5-HF	CCM14-7.62-HF	CMI14-5.08
	CCM15-7.5-HF	CCM15-7.62-HF	CMI15-5.08
	CCM16-7.5-HF	CCM16-7.62-HF	CMI16-5.08
	CCM17-7.5-HF	CCM17-7.62-HF	CMI17-5.08
	CCM18-7.5-HF	CCM18-7.62-HF	CMI18-5.08
	CCM19-7.5-HF	CCM19-7.62-HF	CMI19-5.08
	CCM20-7.5-HF	CCM20-7.62-HF	CMI20-5.08
	CCM21-7.5-HF	CCM21-7.62-HF	CMI21-5.08
	CCM22-7.5-HF	CCM22-7.62-HF	CMI22-5.08
			CMI23-5.08
24 POLI			CMI24-5.08

CMI-C

5,08 mm
2÷24
PA66, UL 94V0
450V
20A
-40°C + 105°C
15A-300V
GN(green)
BK (nero - black) / GY (grigio chiaro/light grey)

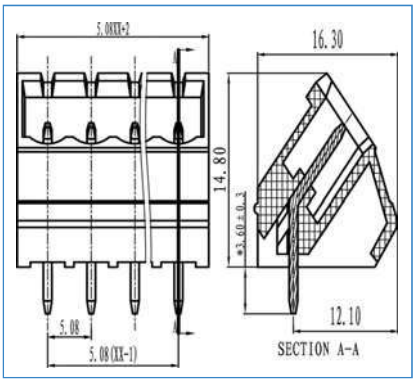

CMI-F

5,08 mm
2÷22
PA66, UL 94V0
450V
20A
-40°C + 105°C
15A-300V
GN(green)
BK (nero - black) / GY (grigio chiaro/light grey)

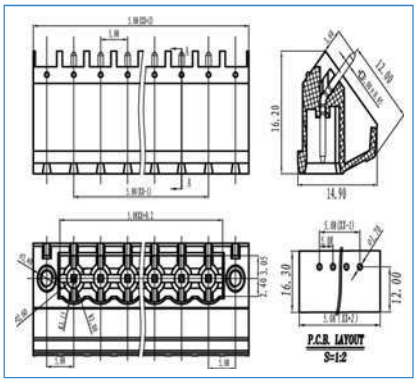

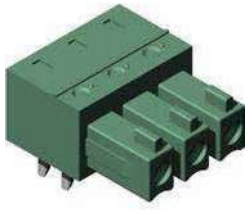

CMA-H

3,81 mm
2÷24
PA66, UL 94V0
250V
10A
-40°C + 105°C
8A-300V
GN(green)
BK (nero - black) / GY (grigio chiaro/light grey)

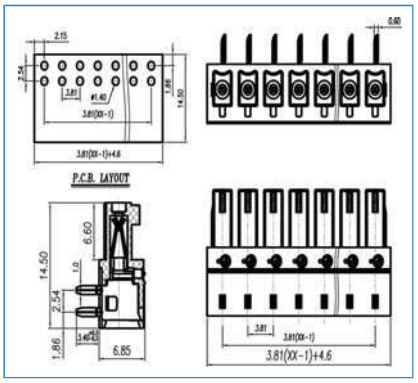

CMI02-5.08-C	CMI02-5.08-F	CMA02-3.81-H
CMI03-5.08-C	CMI03-5.08-F	CMA03-3.81-H
CMI04-5.08-C	CMI04-5.08-F	CMA04-3.81-H
CMI05-5.08-C	CMI05-5.08-F	CMA05-3.81-H
CMI06-5.08-C	CMI06-5.08-F	CMA06-3.81-H
CMI07-5.08-C	CMI07-5.08-F	CMA07-3.81-H
CMI08-5.08-C	CMI08-5.08-F	CMA08-3.81-H
CMI09-5.08-C	CMI09-5.08-F	CMA09-3.81-H
CMI10-5.08-C	CMI10-5.08-F	CMA10-3.81-H
CMI11-5.08-C	CMI11-5.08-F	CMA11-3.81-H
CMI12-5.08-C	CMI12-5.08-F	CMA12-3.81-H
CMI13-5.08-C	CMI13-5.08-F	CMA13-3.81-H
CMI14-5.08-C	CMI14-5.08-F	CMA14-3.81-H
CMI15-5.08-C	CMI15-5.08-F	CMA15-3.81-H
CMI16-5.08-C	CMI16-5.08-F	CMA16-3.81-H
CMI17-5.08-C	CMI17-5.08-F	CMA17-3.81-H
CMI18-5.08-C	CMI18-5.08-F	CMA18-3.81-H
CMI19-5.08-C	CMI19-5.08-F	CMA19-3.81-H
CMI20-5.08-C	CMI20-5.08-F	CMA20-3.81-H
CMI21-5.08-C	CMI21-5.08-F	CMA21-3.81-H
CMI22-5.08-C	CMI22-5.08-F	CMA22-3.81-H
CMI23-5.08-C		CMA23-3.81-H
CMI24-5.08-C		CMA24-3.81-H

euro-block

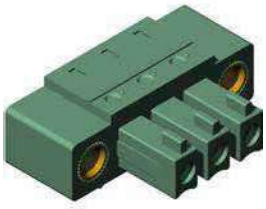

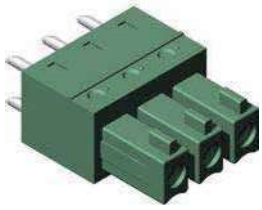

SERIE/PRODUCT SERIES

	CMA-HF	CMA
Passo / Pitch(mm)/ Rastermaß	3,81 mm	3,81 mm
Poli monoblocco/single mold poles/Polzahl	2÷22	2÷24
Vite / Screw / Schraube		
Corpo isolante / Housing / Gehäuse	PA66, UL 94V0	PA66, UL 94V0
Tensione nominale/Rated Voltage/Nennspannung	250V	250V
Corrente Nominale/Rated Current/Nennstrom	10A	10A
Sezione Nominale/Wire section / Nenn querschnitt		
Temperatura / Temperature / Temperatur	-40°C + 105°C	-40°C + 105°C
Coppia di torsione / Torque / Anzugsdrehmoment		
Lunghezza spellatura/ Stripping lenght/ Abisolierlänge		
VDE		
UL - cUL (file n. E342315)	8A-300V	8A-300V
*Colore standard/ Standard colour/ Standardfarbe	GN(green)	GN(green)
Colori a richiesta/ Colours on request/ Farben auf Anfrage	BK (nero - black) / GY (grigio chiaro/light grey)	BK (nero - black) / GY (grigio chiaro/light grey)

*= da non specificare sul codice di ordinazione
Do not specify on ordering code
Muss im Bestellcode nicht angegeben werden

Per evitare sbalzi tra i morsetti ed i fori sul c.s. bisogna prevedere una interruzione quando il n. di poli è superiore a 30.

To avoid loss of pitch between terminal block and pcb it is necessary to interrupt the terminal row by poles higher than 30

Die Polzahl sollte maximal 30 betragen damit das Rastermaß von PCB und Leiterplattenklemme noch übereinstimmen

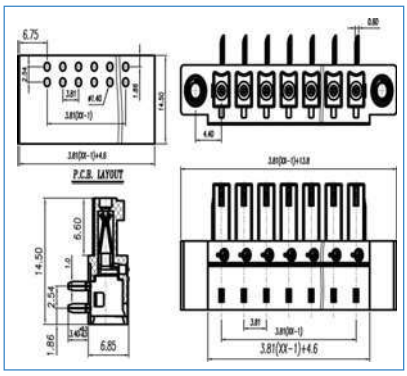

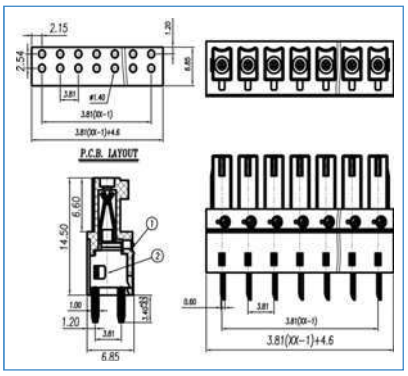

COME ORDINARE
HOW TO ORDER / BESTELLNUMMER

Series	n. poles	pitch	version	color	custom

PASSO / PITCH / RASTERMAß

2 POLI	CMA02-3.81-HF	CMA02-3.81
3 POLI	CMA03-3.81-HF	CMA03-3.81
	CMA04-3.81-HF	CMA04-3.81
	CMA05-3.81-HF	CMA05-3.81
	CMA06-3.81-HF	CMA06-3.81
	CMA07-3.81-HF	CMA07-3.81
	CMA08-3.81-HF	CMA08-3.81
	CMA09-3.81-HF	CMA09-3.81
	CMA10-3.81-HF	CMA10-3.81
	CMA11-3.81-HF	CMA11-3.81
	CMA12-3.81-HF	CMA12-3.81
	CMA13-3.81-HF	CMA13-3.81
	CMA14-3.81-HF	CMA14-3.81
	CMA15-3.81-HF	CMA15-3.81
	CMA16-3.81-HF	CMA16-3.81
	CMA17-3.81-HF	CMA17-3.81
	CMA18-3.81-HF	CMA18-3.81
	CMA19-3.81-HF	CMA19-3.81
	CMA20-3.81-HF	CMA20-3.81
	CMA21-3.81-HF	CMA21-3.81
	CMA22-3.81-HF	CMA22-3.81
		CMA23-3.81
24 POLI		CMA24-3.81

CMA-F

3,81 mm
2÷24
PA66, UL 94V0
250V
10A
-40°C + 105°C
8A-300V
GN(green)
BK (nero - black) / GY (grigio chiaro/light grey)

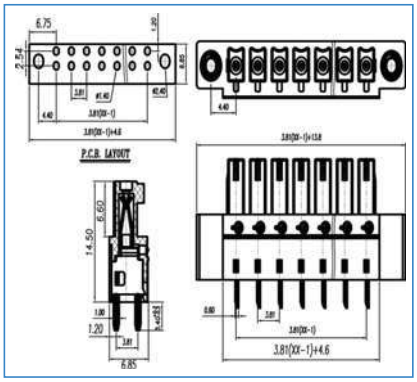

CMA

5 mm	5,08 mm
2÷24	
PA66, UL 94V0	
450V	
20A	
-40°C + 105°C	
15A-300V	
GN(green)	
BK (nero - black) / GY (grigio chiaro/light grey)	

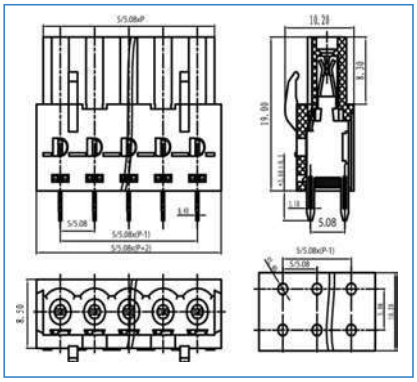

CMA-F

5 mm	5,08 mm
2÷22	
PA66, UL 94V0	
450V	
20A	
-40°C + 105°C	
15A-300V	
GN(green)	
BK (nero - black) / GY (grigio chiaro/light grey)	

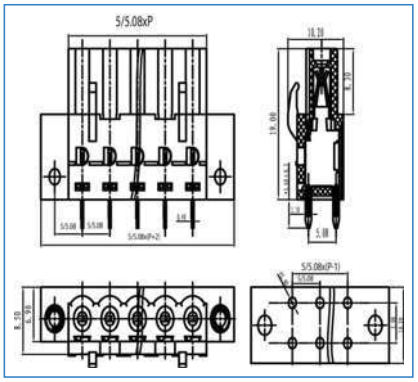

CMA02-3.81-F	CMA02-5	CMA02-5.08	CMA02-5-F	CMA02-5.08-F
CMA03-3.81-F	CMA03-5	CMA03-5.08	CMA03-5-F	CMA03-5.08-F
CMA04-3.81-F	CMA04-5	CMA04-5.08	CMA04-5-F	CMA04-5.08-F
CMA05-3.81-F	CMA05-5	CMA05-5.08	CMA05-5-F	CMA05-5.08-F
CMA06-3.81-F	CMA06-5	CMA06-5.08	CMA06-5-F	CMA06-5.08-F
CMA07-3.81-F	CMA07-5	CMA07-5.08	CMA07-5-F	CMA07-5.08-F
CMA08-3.81-F	CMA08-5	CMA08-5.08	CMA08-5-F	CMA08-5.08-F
CMA09-3.81-F	CMA09-5	CMA09-5.08	CMA09-5-F	CMA09-5.08-F
CMA10-3.81-F	CMA10-5	CMA10-5.08	CMA10-5-F	CMA10-5.08-F
CMA11-3.81-F	CMA11-5	CMA11-5.08	CMA11-5-F	CMA11-5.08-F
CMA12-3.81-F	CMA12-5	CMA12-5.08	CMA12-5-F	CMA12-5.08-F
CMA13-3.81-F	CMA13-5	CMA13-5.08	CMA13-5-F	CMA13-5.08-F
CMA14-3.81-F	CMA14-5	CMA14-5.08	CMA14-5-F	CMA14-5.08-F
CMA15-3.81-F	CMA15-5	CMA15-5.08	CMA15-5-F	CMA15-5.08-F
CMA16-3.81-F	CMA16-5	CMA16-5.08	CMA16-5-F	CMA16-5.08-F
CMA17-3.81-F	CMA17-5	CMA17-5.08	CMA17-5-F	CMA17-5.08-F
CMA18-3.81-F	CMA18-5	CMA18-5.08	CMA18-5-F	CMA18-5.08-F
CMA19-3.81-F	CMA19-5	CMA19-5.08	CMA19-5-F	CMA19-5.08-F
CMA20-3.81-F	CMA20-5	CMA20-5.08	CMA20-5-F	CMA20-5.08-F
CMA21-3.81-F	CMA21-5	CMA21-5.08	CMA21-5-F	CMA21-5.08-F
CMA22-3.81-F	CMA22-5	CMA22-5.08	CMA22-5-F	CMA22-5.08-F
	CMA23-5	CMA23-5.08		
	CMA24-5	CMA24-5.08		

euro-block

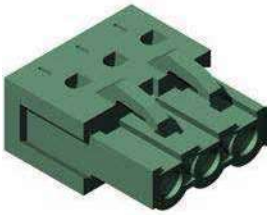

SERIE/PRODUCT SERIES

	CMA-H		CMA-HF	
Passo / Pitch(mm)/ Rastermaß	5 mm	5,08 mm	5 mm	5,08 mm
Poli monoblocco/single mold poles/Polzahl	2÷24		2÷22	
Vite / Screw / Schraube				
Corpo isolante / Housing / Gehäuse	PA66, UL 94V0		PA66, UL 94V0	
Tensione nominale/Rated Voltage/Nennspannung	450V		450V	
Corrente Nominale/Rated Current/Nennstrom	20A		20A	
Sezione Nominale/Wire section / Nenn querschnitt				
Temperatura / Temperature / Temperatur	-40°C + 105°C		-40°C + 105°C	
Coppia di torsione / Torque / Anzugsdrehmoment				
Lunghezza spellatura/ Stripping lenght/ Abisolierlänge				
VDE				
UL - cUL (file n. E342315)	15A-300V		15A-300V	
*Colore standard/ Standard colour/ Standardfarbe	GN(green)		GN(green)	
	BK (nero - black) / GY (grigio chiaro/light grey)		BK (nero - black) / GY (grigio chiaro/light grey)	

Colori a richiesta/ Colours on request/ Farben auf Anfrage
*= da non specificare sul codice di ordinazione
Do not specify on ordering code
Muss im Bestellcode nicht angegeben werden

Per evitare sbalzi tra i morsetti ed i fori sul c.s. bisogna prevedere una interruzione quando il n. di poli è superiore a 30.

To avoid loss of pitch between terminal block and pcb it is necessary to interrupt the terminal row by poles higher than 30

Die Polzahl sollte maximal 30 betragen damit das Rastermaß von PCB und Leiterplattenklemme noch übereinstimmen

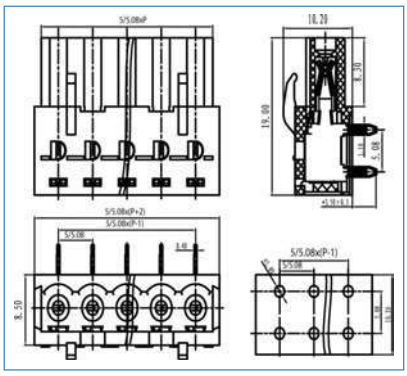

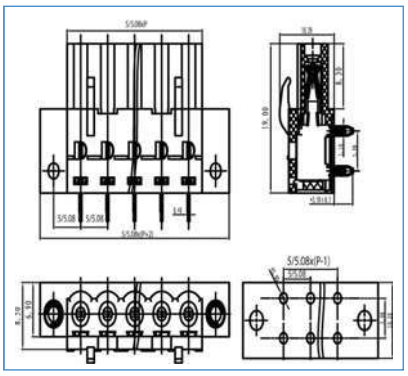

COME ORDINARE
HOW TO ORDER / BESTELLNUMMER

Series	n. poles	pitch	version	color	custom

PASSO / PITCH / RASTERMAẞ

2 POLI	CMA02-5-H	CMA02-5.08-H	CMA02-5-HF	CMA02-5.08-HF
3 POLI	CMA03-5-H	CMA03-5.08-H	CMA03-5-HF	CMA03-5.08-HF
	CMA04-5-H	CMA04-5.08-H	CMA04-5-HF	CMA04-5.08-HF
	CMA05-5-H	CMA05-5.08-H	CMA05-5-HF	CMA05-5.08-HF
	CMA06-5-H	CMA06-5.08-H	CMA06-5-HF	CMA06-5.08-HF
	CMA07-5-H	CMA07-5.08-H	CMA07-5-HF	CMA07-5.08-HF
	CMA08-5-H	CMA08-5.08-H	CMA08-5-HF	CMA08-5.08-HF
	CMA09-5-H	CMA09-5.08-H	CMA09-5-HF	CMA09-5.08-HF
	CMA10-5-H	CMA10-5.08-H	CMA10-5-HF	CMA10-5.08-HF
	CMA11-5-H	CMA11-5.08-H	CMA11-5-HF	CMA11-5.08-HF
	CMA12-5-H	CMA12-5.08-H	CMA12-5-HF	CMA12-5.08-HF
	CMA13-5-H	CMA13-5.08-H	CMA13-5-HF	CMA13-5.08-HF
	CMA14-5-H	CMA14-5.08-H	CMA14-5-HF	CMA14-5.08-HF
	CMA15-5-H	CMA15-5.08-H	CMA15-5-HF	CMA15-5.08-HF
	CMA16-5-H	CMA16-5.08-H	CMA16-5-HF	CMA16-5.08-HF
	CMA17-5-H	CMA17-5.08-H	CMA17-5-HF	CMA17-5.08-HF
	CMA18-5-H	CMA18-5.08-H	CMA18-5-HF	CMA18-5.08-HF
	CMA19-5-H	CMA19-5.08-H	CMA19-5-HF	CMA19-5.08-HF
	CMA20-5-H	CMA20-5.08-H	CMA20-5-HF	CMA20-5.08-HF
	CMA21-5-H	CMA21-5.08-H	CMA21-5-HF	CMA21-5.08-HF
	CMA22-5-H	CMA22-5.08-H	CMA22-5-HF	CMA22-5.08-HF
	CMA23-5-H	CMA23-5.08-H		
24 POLI	CMA24-5-H	CMA24-5.08-H		

CMK

3,81 mm
2÷24
PA66, UL 94V0
250V
7A
-40°C + 105°C
8A-300V
GN(green)
BK (nero - black) / GY (grigio chiaro/light grey)

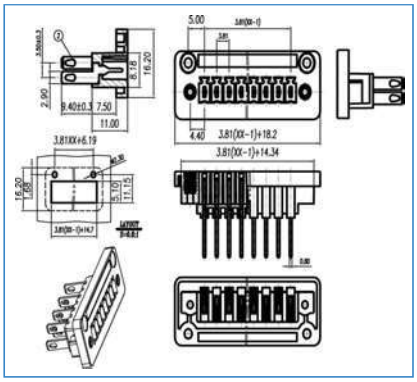

CMK

5,08 mm
2÷24
PA66, UL 94V0
450V
20A
-40°C + 105°C
7 mm
15A-300V
GN(green)
BK (nero - black) / GY (grigio chiaro/light grey)

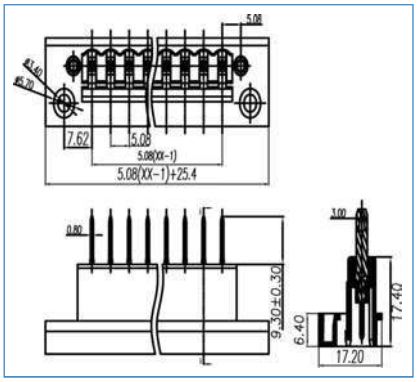

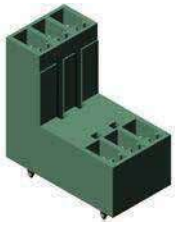

CMD-V

3,5 mm	3,81 mm
2+2÷24+24	
PA66, UL 94V0	
250V	
7A	
-40°C + 105°C	
8A-300V	
GN(green)	
BK (nero - black) / GY (grigio chiaro/light grey)	

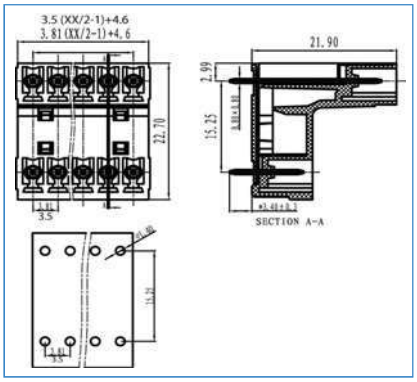

CMK02-3.81	CMK02-5.08	CMD02-3.5-V	CMD02-3.81-V
CMK03-3.81	CMK03-5.08	CMD03-3.5-V	CMD03-3.81-V
CMK04-3.81	CMK04-5.08	CMD04-3.5-V	CMD04-3.81-V
CMK05-3.81	CMK05-5.08	CMD05-3.5-V	CMD05-3.81-V
CMK06-3.81	CMK06-5.08	CMD06-3.5-V	CMD06-3.81-V
CMK07-3.81	CMK07-5.08	CMD07-3.5-V	CMD07-3.81-V
CMK08-3.81	CMK08-5.08	CMD08-3.5-V	CMD08-3.81-V
CMK09-3.81	CMK09-5.08	CMD09-3.5-V	CMD09-3.81-V
CMK10-3.81	CMK10-5.08	CMD10-3.5-V	CMD10-3.81-V
CMK11-3.81	CMK11-5.08	CMD11-3.5-V	CMD11-3.81-V
CMK12-3.81	CMK12-5.08	CMD12-3.5-V	CMD12-3.81-V
CMK13-3.81	CMK13-5.08	CMD13-3.5-V	CMD13-3.81-V
CMK14-3.81	CMK14-5.08	CMD14-3.5-V	CMD14-3.81-V
CMK15-3.81	CMK15-5.08	CMD15-3.5-V	CMD15-3.81-V
CMK16-3.81	CMK16-5.08	CMD16-3.5-V	CMD16-3.81-V
CMK17-3.81	CMK17-5.08	CMD17-3.5-V	CMD17-3.81-V
CMK18-3.81	CMK18-5.08	CMD18-3.5-V	CMD18-3.81-V
CMK19-3.81	CMK19-5.08	CMD19-3.5-V	CMD19-3.81-V
CMK20-3.81	CMK20-5.08	CMD20-3.5-V	CMD20-3.81-V
CMK21-3.81	CMK21-5.08	CMD21-3.5-V	CMD21-3.81-V
CMK22-3.81	CMK22-5.08	CMD22-3.5-V	CMD22-3.81-V
CMK23-3.81	CMK23-5.08	CMD23-3.5-V	CMD23-3.81-V
CMK24-3.81	CMK24-5.08	CMD24-3.5-V	CMD24-3.81-V

euro-block

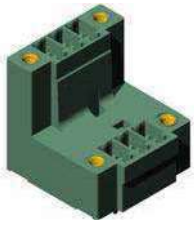

SERIE/PRODUCT SERIES

	CMD-H		CMD-VF	
Passo / Pitch(mm)/ Rastermaß	3,5 mm	3,81 mm	3,5 mm	3,81 mm
Poli monoblocco/single mold poles/Polzahl	2+2÷24+24		2+2÷22+22	
Vite / Screw / Schraube				
Corpo isolante / Housing / Gehäuse	PA66, UL 94V0		PA66, UL 94V0	
Tensione nominale/Rated Voltage/Nennspannung	250V		250V	
Corrente Nominale/Rated Current/Nennstrom	7A		7A	
Sezione Nominale/Wire section / Nenn querschnitt				
Temperatura / Temperature / Temperatur	-40°C + 105°C		-40°C + 105°C	
Coppia di torsione / Torque / Anzugsdrehmoment				
Lunghezza spellatura/ Stripping lenght/ Abisolierlänge				
VDE				
UL - cUL (file n. E342315)	8A-300V		8A-300V	
*Colore standard/ Standard colour/ Standardfarbe	GN(green)		GN(green)	
	BK (nero - black) / GY (grigio chiaro/light grey)		BK (nero - black) / GY (grigio chiaro/light grey)	

Colori a richiesta/ Colours on request/ Farben auf Anfrage
*= da non specificare sul codice di ordinazione
Do not specify on ordering code
Muss im Bestellcode nicht angegeben werden

Per evitare sbalzi tra i morsetti ed i fori sul c.s. bisogna prevedere una interruzione quando il n. di poli è superiore a 30.

To avoid loss of pitch between terminal block and pcb it is necessary to interrupt the terminal row by poles higher than 30

Die Polzahl sollte maximal 30 betragen damit das Rastermaß von PCB und Leiterplattenklemme noch übereinstimmen

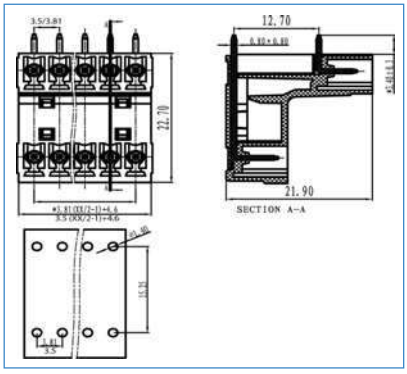

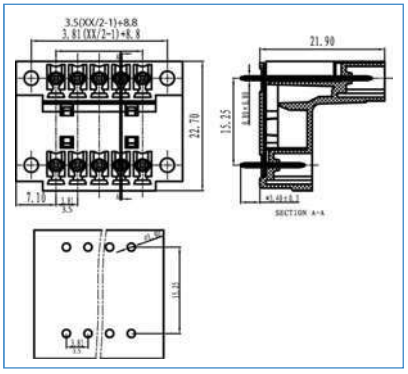

COME ORDINARE
HOW TO ORDER / BESTELLNUMMER

Series	n. poles	pitch	version	color	custom

PASSO / PITCH / RASTERMAß

2 POLI	CMD02-3.5-H	CMD02-3.81-H	CMD02-3.5-VF	CMD02-3.81-VF
3 POLI	CMD03-3.5-H	CMD03-3.81-H	CMD03-3.5-VF	CMD03-3.81-VF
	CMD04-3.5-H	CMD04-3.81-H	CMD04-3.5-VF	CMD04-3.81-VF
	CMD05-3.5-H	CMD05-3.81-H	CMD05-3.5-VF	CMD05-3.81-VF
	CMD06-3.5-H	CMD06-3.81-H	CMD06-3.5-VF	CMD06-3.81-VF
	CMD07-3.5-H	CMD07-3.81-H	CMD07-3.5-VF	CMD07-3.81-VF
	CMD08-3.5-H	CMD08-3.81-H	CMD08-3.5-VF	CMD08-3.81-VF
	CMD09-3.5-H	CMD09-3.81-H	CMD09-3.5-VF	CMD09-3.81-VF
	CMD10-3.5-H	CMD10-3.81-H	CMD10-3.5-VF	CMD10-3.81-VF
	CMD11-3.5-H	CMD11-3.81-H	CMD11-3.5-VF	CMD11-3.81-VF
	CMD12-3.5-H	CMD12-3.81-H	CMD12-3.5-VF	CMD12-3.81-VF
	CMD13-3.5-H	CMD13-3.81-H	CMD13-3.5-VF	CMD13-3.81-VF
	CMD14-3.5-H	CMD14-3.81-H	CMD14-3.5-VF	CMD14-3.81-VF
	CMD15-3.5-H	CMD15-3.81-H	CMD15-3.5-VF	CMD15-3.81-VF
	CMD16-3.5-H	CMD16-3.81-H	CMD16-3.5-VF	CMD16-3.81-VF
	CMD17-3.5-H	CMD17-3.81-H	CMD17-3.5-VF	CMD17-3.81-VF
	CMD18-3.5-H	CMD18-3.81-H	CMD18-3.5-VF	CMD18-3.81-VF
	CMD19-3.5-H	CMD19-3.81-H	CMD19-3.5-VF	CMD19-3.81-VF
	CMD20-3.5-H	CMD20-3.81-H	CMD20-3.5-VF	CMD20-3.81-VF
	CMD21-3.5-H	CMD21-3.81-H	CMD21-3.5-VF	CMD21-3.81-VF
	CMD22-3.5-H	CMD22-3.81-H	CMD22-3.5-VF	CMD22-3.81-VF
	CMD23-3.5-H	CMD23-3.81-H		
24 POLI	CMD24-3.5-H	CMD24-3.81-H		

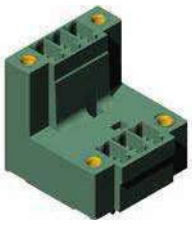

CMD-HF

3,5 mm	3,81 mm
2+2÷22+22	
PA66, UL 94V0	
250V	
7A	
-40°C + 105°C	
8A-300V	
GN(green)	
BK (nero - black) / GY (grigio chiaro/light grey)	

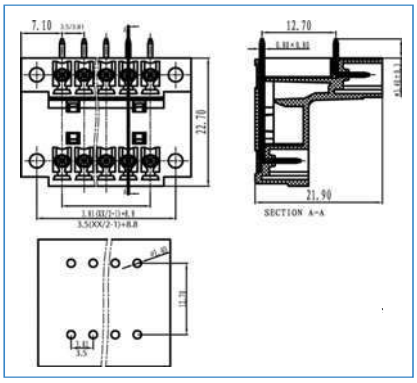

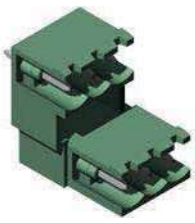

CMD-V

5 mm	5,08 mm
2+2÷3+3	
PA66, UL 94V0	
450V	
20A	
-40°C + 105°C	
15A-300V	
GN(green)	
BK (nero - black) / GY (grigio chiaro/light grey)	

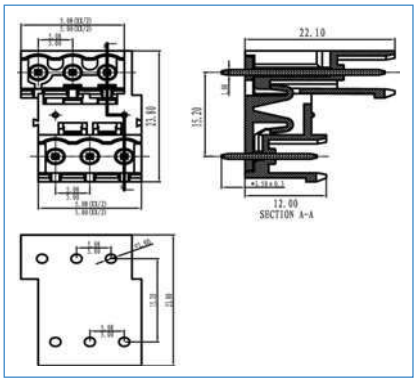

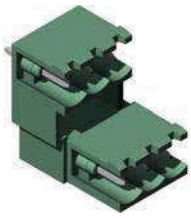

CMD-H

5 mm	5,08 mm
2+2÷3+3	
PA66, UL 94V0	
450V	
20A	
-40°C + 105°C	
15A-300V	
GN(green)	
BK (nero - black) / GY (grigio chiaro/light grey)	

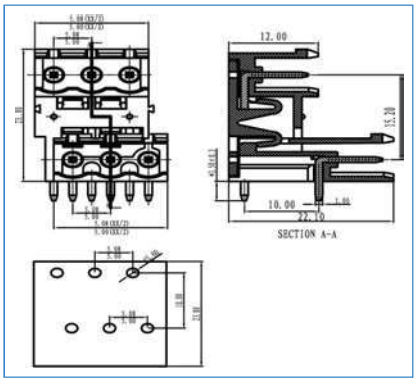

CMD02-3.5-HF	CMD02-3.81-HF	CMD02-5-V	CMD02-5.08-V	CMD02-5-H	CMD02-5.08-H
CMD03-3.5-HF	CMD03-3.81-HF	CMD03-5-V	CMD03-5.08-V	CMD03-5-H	CMD03-5.08-H
CMD04-3.5-HF	CMD04-3.81-HF				
CMD05-3.5-HF	CMD05-3.81-HF				
CMD06-3.5-HF	CMD06-3.81-HF				
CMD07-3.5-HF	CMD07-3.81-HF				
CMD08-3.5-HF	CMD08-3.81-HF				
CMD09-3.5-HF	CMD09-3.81-HF				
CMD10-3.5-HF	CMD10-3.81-HF				
CMD11-3.5-HF	CMD11-3.81-HF				
CMD12-3.5-HF	CMD12-3.81-HF				
CMD13-3.5-HF	CMD13-3.81-HF				
CMD14-3.5-HF	CMD14-3.81-HF				
CMD15-3.5-HF	CMD15-3.81-HF				
CMD16-3.5-HF	CMD16-3.81-HF				
CMD17-3.5-HF	CMD17-3.81-HF				
CMD18-3.5-HF	CMD18-3.81-HF				
CMD19-3.5-HF	CMD19-3.81-HF				
CMD20-3.5-HF	CMD20-3.81-HF				
CMD21-3.5-HF	CMD21-3.81-HF				
CMD22-3.5-HF	CMD22-3.81-HF				
		CMD24-5-V	CMD24-5.08-V	CMD24-5-H	CMD24-5.08-H

euro-block

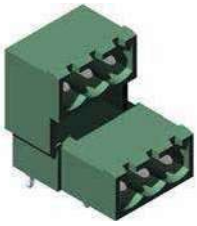

SERIE/PRODUCT SERIES

	CMD-CV		CMD-CH	
Passo / Pitch(mm)/ Rastermaß	5 mm	5,08 mm	5 mm	5,08 mm
Poli monoblocco/single mold poles/Polzahl	2+2÷3+3		2+2÷3+3	
Vite / Screw / Schraube				
Corpo isolante / Housing / Gehäuse	PA66, UL 94V0		PA66, UL 94V0	
Tensione nominale/Rated Voltage/Nennspannung	450V		450V	
Corrente Nominale/Rated Current/Nennstrom	20A		20A	
Sezione Nominale/Wire section / Nenn querschnitt				
Temperatura / Temperature / Temperatur	-40°C + 105°C		-40°C + 105°C	
Coppia di torsione / Torque / Anzugsdrehmoment				
Lunghezza spellatura/ Stripping lenght/ Abisolierlänge				
VDE				
UL - cUL (file n. E342315)	15A-300V		15A-300V	
*Colore standard/ Standard colour/ Standardfarbe	GN(green)		GN(green)	
	BK (nero - black) / GY (grigio chiaro/light grey)		BK (nero - black) / GY (grigio chiaro/light grey)	

Colori a richiesta/ Colours on request/ Farben auf Anfrage
*= da non specificare sul codice di ordinazione
Do not specify on ordering code
Muss im Bestellcode nicht angegeben werden

Per evitare sbalzi tra i morsetti ed i fori sul c.s. bisogna prevedere una interruzione quando il n. di poli è superiore a 30.

To avoid loss of pitch between terminal block and pcb it is necessary to interrupt the terminal row by poles higher than 30

Die Polzahl sollte maximal 30 betragen damit das Rastermaß von PCB und Leiterplattenklemme noch übereinstimmen

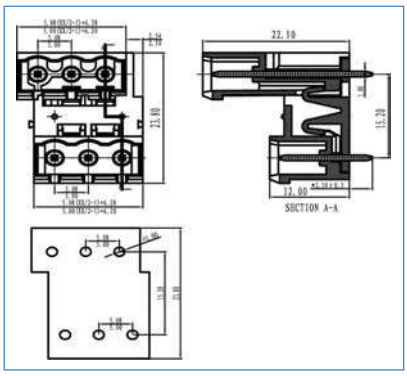

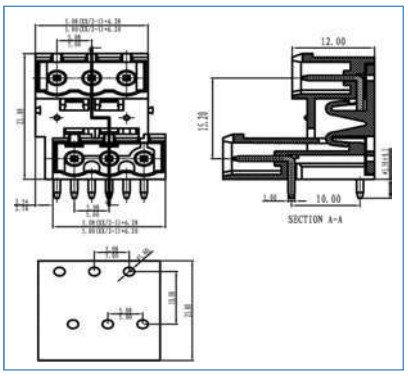

COME ORDINARE
HOW TO ORDER / BESTELLNUMMER

Series	n. poles	pitch	version	color	custom

PASSO / PITCH / RASTERMAß

2 POLI	CMD02-5-CV	CMD02-5.08-CV	CMD02-5-CH	CMD02-5.08-CH
3 POLI	CMD03-5-CV	CMD03-5.08-CV	CMD03-5-CH	CMD03-5.08-CH
24 POLI	CMD24-5-CV	CMD24-5.08-CV	CMD24-5-CH	CMD24-5.08-CH

CMD-VF

5 mm	5,08 mm
2+2÷3+3	
PA66, UL 94V0	
450V	
20A	
-40°C + 105°C	
15A-300V	
GN(green)	
BK (nero - black) / GY (grigio chiaro/light grey)	

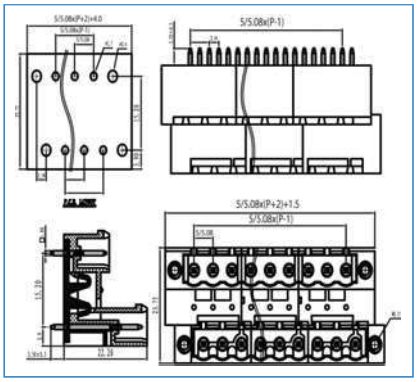

CMD-HF

5 mm	5,08 mm
2+2÷3+3	
PA66, UL 94V0	
450V	
20A	
-40°C + 105°C	
15A-300V	
GN(green)	
BK (nero - black) / GY (grigio chiaro/light grey)	

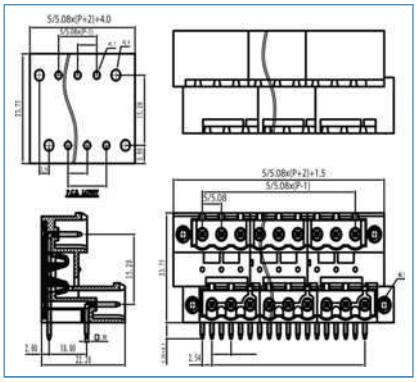

MDL-V

2,5 mm
2+2÷24+24
PA66, UL 94V0
130V
6A
-40°C + 105°C
5A-150V
GN(green)
BK (nero - black) / GY (grigio chiaro/light grey)

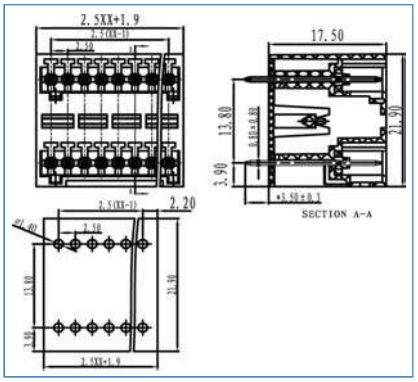

CMD02-5-VF	CMD02-5.08-VF	CMD02-5-HF	CMD02-5.08-HF	MDL02-2.5-V
CMD03-5-VF	CMD03-5.08-VF	CMD03-5-HF	CMD03-5.08-HF	MDL03-2.5-V
				MDL04-2.5-V
				MDL05-2.5-V
				MDL06-2.5-V
				MDL07-2.5-V
				MDL08-2.5-V
				MDL09-2.5-V
				MDL10-2.5-V
				MDL11-2.5-V
				MDL12-2.5-V
				MDL13-2.5-V
				MDL14-2.5-V
				MDL15-2.5-V
				MDL16-2.5-V
				MDL17-2.5-V
				MDL18-2.5-V
				MDL19-2.5-V
				MDL20-2.5-V
				MDL21-2.5-V
				MDL22-2.5-V
				MDL23-2.5-V
CMD24-5-VF	CMD24-5.08-VF	CMD24-5-HF	CMD24-5.08-HF	MDL24-2.5-V

euro-block

SERIE/PRODUCT SERIES

	MDL-H	MDL-V	
Passo / Pitch(mm)/ Rastermaß	2,5 mm	3,5 mm	3,81 mm
Poli monoblocco/single mold poles/Polzahl	2+2÷24+24	2+2÷24+24	
Vite / Screw / Schraube			
Corpo isolante / Housing / Gehäuse	PA66, UL 94V0	PA66, UL 94V0	
Tensione nominale/Rated Voltage/Nennspannung	130V	250V	
Corrente Nominale/Rated Current/Nennstrom	6A	7A	
Sezione Nominale/Wire section / Nenn querschnitt			
Temperatura / Temperature / Temperatur	-40°C + 105°C	-40°C + 105°C	
Coppia di torsione / Torque / Anzugsdrehmoment			
Lunghezza spellatura/ Stripping lenght/ Abisolierlänge			
VDE			
UL - cUL (file n. E342315)	5A-150V	8A-300V	
*Colore standard/ Standard colour/ Standardfarbe	GN(green)	GN(green)	
	BK (nero - black) / GY (grigio chiaro/light grey)	BK (nero - black) / GY (grigio chiaro/light grey)	

Colori a richiesta/ Colours on request/ Farben auf Anfrage
*= da non specificare sul codice di ordinazione
Do not specify on ordering code
Muss im Bestellcode nicht angegeben werden

Per evitare sbalzi tra i morsetti ed i fori sul c.s. bisogna prevedere una interruzione quando il n. di poli è superiore a 30.

To avoid loss of pitch between terminal block and pcb it is necessary to interrupt the terminal row by poles higher than 30

Die Polzahl sollte maximal 30 betragen damit das Rastermaß von PCB und Leiterplattenklemme noch übereinstimmen

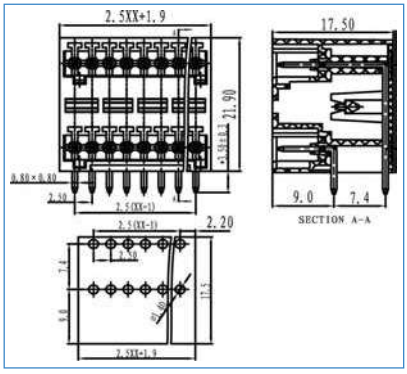

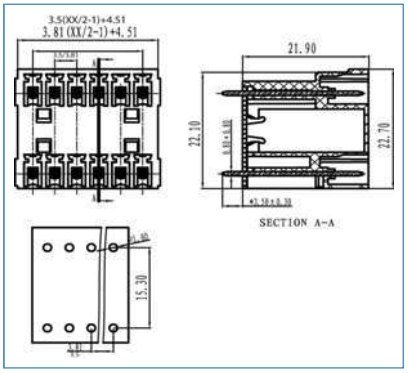

COME ORDINARE
HOW TO ORDER / BESTELLNUMMER

Series	n. poles	pitch	version	color	custom

PASSO / PITCH / RASTERMAß

2 POLI	MDL02-2.5-H	MDL02-3.5-V	MDL02-3.81-V
3 POLI	MDL03-2.5-H	MDL03-3.5-V	MDL03-3.81-V
	MDL04-2.5-H	MDL04-3.5-V	MDL04-3.81-V
	MDL05-2.5-H	MDL05-3.5-V	MDL05-3.81-V
	MDL06-2.5-H	MDL06-3.5-V	MDL06-3.81-V
	MDL07-2.5-H	MDL07-3.5-V	MDL07-3.81-V
	MDL08-2.5-H	MDL08-3.5-V	MDL08-3.81-V
	MDL09-2.5-H	MDL09-3.5-V	MDL09-3.81-V
	MDL10-2.5-H	MDL10-3.5-V	MDL10-3.81-V
	MDL11-2.5-H	MDL11-3.5-V	MDL11-3.81-V
	MDL12-2.5-H	MDL12-3.5-V	MDL12-3.81-V
	MDL13-2.5-H	MDL13-3.5-V	MDL13-3.81-V
	MDL14-2.5-H	MDL14-3.5-V	MDL14-3.81-V
	MDL15-2.5-H	MDL15-3.5-V	MDL15-3.81-V
	MDL16-2.5-H	MDL16-3.5-V	MDL16-3.81-V
	MDL17-2.5-H	MDL17-3.5-V	MDL17-3.81-V
	MDL18-2.5-H	MDL18-3.5-V	MDL18-3.81-V
	MDL19-2.5-H	MDL19-3.5-V	MDL19-3.81-V
	MDL20-2.5-H	MDL20-3.5-V	MDL20-3.81-V
	MDL21-2.5-H	MDL21-3.5-V	MDL21-3.81-V
	MDL22-2.5-H	MDL22-3.5-V	MDL22-3.81-V
	MDL23-2.5-H	MDL23-3.5-V	MDL23-3.81-V
24 POLI	MDL24-2.5-H	MDL24-3.5-V	MDL24-3.81-V

MDL-H

3,5 mm	3,81 mm
2+2÷24+24	
PA66, UL 94V0	
250V	
7A	
-40°C + 105°C	
8A-300V	
GN(green)	
BK (nero - black) / GY (grigio chiaro/light grey)	

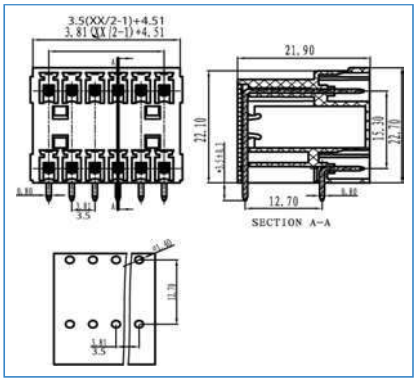

MDL-VF

3,5 mm	3,81 mm
2+2÷22+22	
PA66, UL 94V0	
250V	
7A	
-40°C + 105°C	
8A-300V	
GN(green)	
BK (nero - black) / GY (grigio chiaro/light grey)	

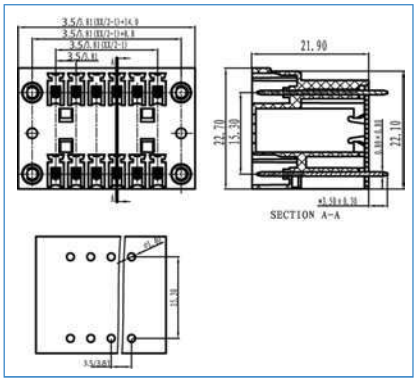

MDL-HF

3,5 mm	3,81 mm
2+2÷22+22	
PA66, UL 94V0	
250V	
7A	
-40°C + 105°C	
8A-300V	
GN(green)	
BK (nero - black) / GY (grigio chiaro/light grey)	

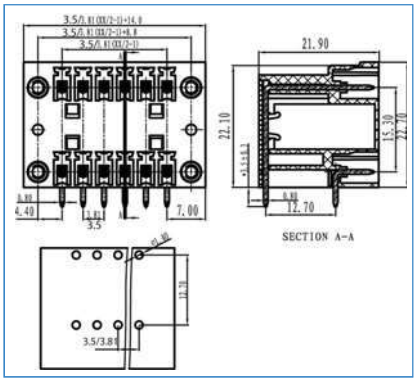

MDL02-3.5-H	MDL02-3.81-H	MDL02-3.5-VF	MDL02-3.81-VF	MDL02-3.5-HF	MDL02-3.81-HF
MDL03-3.5-H	MDL03-3.81-H	MDL03-3.5-VF	MDL03-3.81-VF	MDL03-3.5-HF	MDL03-3.81-HF
MDL04-3.5-H	MDL04-3.81-H	MDL04-3.5-VF	MDL04-3.81-VF	MDL04-3.5-HF	MDL04-3.81-HF
MDL05-3.5-H	MDL05-3.81-H	MDL05-3.5-VF	MDL05-3.81-VF	MDL05-3.5-HF	MDL05-3.81-HF
MDL06-3.5-H	MDL06-3.81-H	MDL06-3.5-VF	MDL06-3.81-VF	MDL06-3.5-HF	MDL06-3.81-HF
MDL07-3.5-H	MDL07-3.81-H	MDL07-3.5-VF	MDL07-3.81-VF	MDL07-3.5-HF	MDL07-3.81-HF
MDL08-3.5-H	MDL08-3.81-H	MDL08-3.5-VF	MDL08-3.81-VF	MDL08-3.5-HF	MDL08-3.81-HF
MDL09-3.5-H	MDL09-3.81-H	MDL09-3.5-VF	MDL09-3.81-VF	MDL09-3.5-HF	MDL09-3.81-HF
MDL10-3.5-H	MDL10-3.81-H	MDL10-3.5-VF	MDL10-3.81-VF	MDL10-3.5-HF	MDL10-3.81-HF
MDL11-3.5-H	MDL11-3.81-H	MDL11-3.5-VF	MDL11-3.81-VF	MDL11-3.5-HF	MDL11-3.81-HF
MDL12-3.5-H	MDL12-3.81-H	MDL12-3.5-VF	MDL12-3.81-VF	MDL12-3.5-HF	MDL12-3.81-HF
MDL13-3.5-H	MDL13-3.81-H	MDL13-3.5-VF	MDL13-3.81-VF	MDL13-3.5-HF	MDL13-3.81-HF
MDL14-3.5-H	MDL14-3.81-H	MDL14-3.5-VF	MDL14-3.81-VF	MDL14-3.5-HF	MDL14-3.81-HF
MDL15-3.5-H	MDL15-3.81-H	MDL15-3.5-VF	MDL15-3.81-VF	MDL15-3.5-HF	MDL15-3.81-HF
MDL16-3.5-H	MDL16-3.81-H	MDL16-3.5-VF	MDL16-3.81-VF	MDL16-3.5-HF	MDL16-3.81-HF
MDL17-3.5-H	MDL17-3.81-H	MDL17-3.5-VF	MDL17-3.81-VF	MDL17-3.5-HF	MDL17-3.81-HF
MDL18-3.5-H	MDL18-3.81-H	MDL18-3.5-VF	MDL18-3.81-VF	MDL18-3.5-HF	MDL18-3.81-HF
MDL19-3.5-H	MDL19-3.81-H	MDL19-3.5-VF	MDL19-3.81-VF	MDL19-3.5-HF	MDL19-3.81-HF
MDL20-3.5-H	MDL20-3.81-H	MDL20-3.5-VF	MDL20-3.81-VF	MDL20-3.5-HF	MDL20-3.81-HF
MDL21-3.5-H	MDL21-3.81-H	MDL21-3.5-VF	MDL21-3.81-VF	MDL21-3.5-HF	MDL21-3.81-HF
MDL22-3.5-H	MDL22-3.81-H	MDL22-3.5-VF	MDL22-3.81-VF	MDL22-3.5-HF	MDL22-3.81-HF
MDL23-3.5-H	MDL23-3.81-H				
MDL24-3.5-H	MDL24-3.81-H				

euro-block

SERIE/PRODUCT SERIES

	MDL-V		MDL-H	
Passo / Pitch(mm)/ Rastermaß	5 mm	5,08 mm	5 mm	5,08 mm
Poli monoblocco/single mold poles/Polzahl	2+2÷24+24		2+2÷24+24	
Vite / Screw / Schraube				
Corpo isolante / Housing / Gehäuse	PA66, UL 94V0		PA66, UL 94V0	
Tensione nominale/Rated Voltage/Nennspannung	450V		450V	
Corrente Nominale/Rated Current/Nennstrom	20A		20A	
Sezione Nominale/Wire section / Nenn querschnitt				
Temperatura / Temperature / Temperatur	-40°C + 105°C		-40°C + 105°C	
Coppia di torsione / Torque / Anzugsdrehmoment				
Lunghezza spellatura/ Stripping lenght/ Abisolierlänge				
VDE				
UL - cUL (file n. E342315)	15A-300V		15A-300V	
*Colore standard/ Standard colour/ Standardfarbe	GN(green)		GN(green)	
	BK (nero - black) / GY (grigio chiaro/light grey)		BK (nero - black) / GY (grigio chiaro/light grey)	

Colori a richiesta/ Colours on request/ Farben auf Anfrage
*= da non specificare sul codice di ordinazione
Do not specify on ordering code
Muss im Bestellcode nicht angegeben werden

Per evitare sbalzi tra i morsetti ed i fori sul c.s. bisogna prevedere una interruzione quando il n. di poli è superiore a 30.

To avoid loss of pitch between terminal block and pcb it is necessary to interrupt the terminal row by poles higher than 30

Die Polzahl sollte maximal 30 betragen damit das Rastermaß von PCB und Leiterplattenklemme noch übereinstimmen

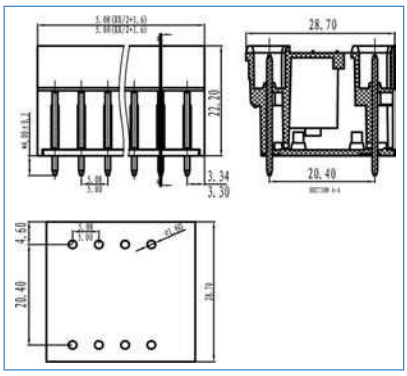

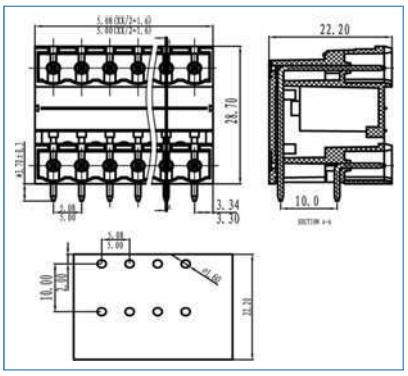

COME ORDINARE
HOW TO ORDER / BESTELLNUMMER

Series	n. poles	pitch	version	color	custom

PASSO / PITCH / RASTERMAẞ

2 POLI	MDL02-5-V	MDL02-5.08-V	MDL02-5-H	MDL02-5.08-H
3 POLI	MDL03-5-V	MDL03-5.08-V	MDL03-5-H	MDL03-5.08-H
	MDL04-5-V	MDL04-5.08-V	MDL04-5-H	MDL04-5.08-H
	MDL05-5-V	MDL05-5.08-V	MDL05-5-H	MDL05-5.08-H
	MDL06-5-V	MDL06-5.08-V	MDL06-5-H	MDL06-5.08-H
	MDL07-5-V	MDL07-5.08-V	MDL07-5-H	MDL07-5.08-H
	MDL08-5-V	MDL08-5.08-V	MDL08-5-H	MDL08-5.08-H
	MDL09-5-V	MDL09-5.08-V	MDL09-5-H	MDL09-5.08-H
	MDL10-5-V	MDL10-5.08-V	MDL10-5-H	MDL10-5.08-H
	MDL11-5-V	MDL11-5.08-V	MDL11-5-H	MDL11-5.08-H
	MDL12-5-V	MDL12-5.08-V	MDL12-5-H	MDL12-5.08-H
	MDL13-5-V	MDL13-5.08-V	MDL13-5-H	MDL13-5.08-H
	MDL14-5-V	MDL14-5.08-V	MDL14-5-H	MDL14-5.08-H
	MDL15-5-V	MDL15-5.08-V	MDL15-5-H	MDL15-5.08-H
	MDL16-5-V	MDL16-5.08-V	MDL16-5-H	MDL16-5.08-H
	MDL17-5-V	MDL17-5.08-V	MDL17-5-H	MDL17-5.08-H
	MDL18-5-V	MDL18-5.08-V	MDL18-5-H	MDL18-5.08-H
	MDL19-5-V	MDL19-5.08-V	MDL19-5-H	MDL19-5.08-H
	MDL20-5-V	MDL20-5.08-V	MDL20-5-H	MDL20-5.08-H
	MDL21-5-V	MDL21-5.08-V	MDL21-5-H	MDL21-5.08-H
	MDL22-5-V	MDL22-5.08-V	MDL22-5-H	MDL22-5.08-H
	MDL23-5-V	MDL23-5.08-V	MDL23-5-H	MDL23-5.08-H
24 POLI	MDL24-5-V	MDL24-5.08-V	MDL24-5-H	MDL24-5.08-H

MDL-VF

5 mm	5,08 mm
2+2÷22+22	
PA66, UL 94V0	
450V	
20A	
-40°C + 105°C	
15A-300V	
GN(green)	
BK (nero - black) / GY (grigio chiaro/light grey)	

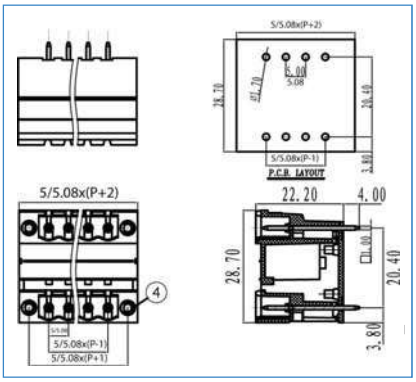

MDL-HF

5 mm	5,08 mm
2+2÷22+22	
PA66, UL 94V0	
450V	
20A	
-40°C + 105°C	
15A-300V	
GN(green)	
BK (nero - black) / GY (grigio chiaro/light grey)	

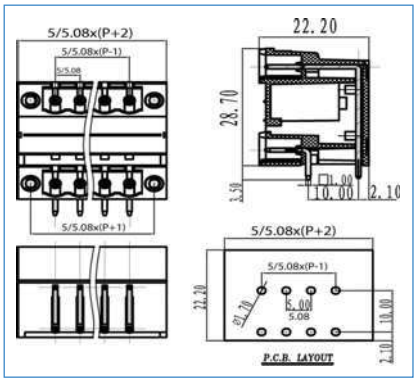

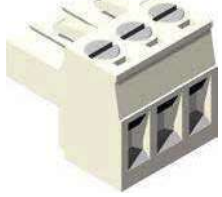

SFC04-L

5 mm
4
M3
PA66, UL 94V0
450V
20A
2,5 mm2 28÷14 AWG
-40°C + 105°C
0,5Nm (4,5 Lb in)
7 mm
GY(grey)
BK (nero - black) / GY (grigio chiaro/light grey)

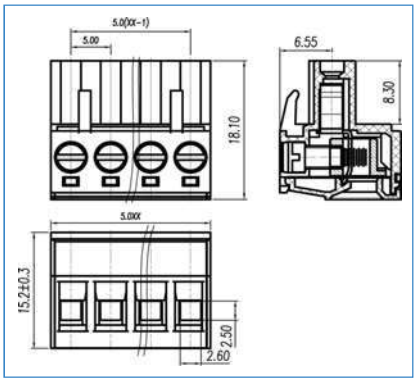

MDL02-5-VF	MDL02-5.08-VF	MDL02-5-HF	MDL02-5.08-HF	SFC04-5-L
MDL03-5-VF	MDL03-5.08-VF	MDL03-5-HF	MDL03-5.08-HF	
MDL04-5-VF	MDL04-5.08-VF	MDL04-5-HF	MDL04-5.08-HF	
MDL05-5-VF	MDL05-5.08-VF	MDL05-5-HF	MDL05-5.08-HF	
MDL06-5-VF	MDL06-5.08-VF	MDL06-5-HF	MDL06-5.08-HF	
MDL07-5-VF	MDL07-5.08-VF	MDL07-5-HF	MDL07-5.08-HF	
MDL08-5-VF	MDL08-5.08-VF	MDL08-5-HF	MDL08-5.08-HF	
MDL09-5-VF	MDL09-5.08-VF	MDL09-5-HF	MDL09-5.08-HF	
MDL10-5-VF	MDL10-5.08-VF	MDL10-5-HF	MDL10-5.08-HF	
MDL11-5-VF	MDL11-5.08-VF	MDL11-5-HF	MDL11-5.08-HF	
MDL12-5-VF	MDL12-5.08-VF	MDL12-5-HF	MDL12-5.08-HF	
MDL13-5-VF	MDL13-5.08-VF	MDL13-5-HF	MDL13-5.08-HF	
MDL14-5-VF	MDL14-5.08-VF	MDL14-5-HF	MDL14-5.08-HF	
MDL15-5-VF	MDL15-5.08-VF	MDL15-5-HF	MDL15-5.08-HF	
MDL16-5-VF	MDL16-5.08-VF	MDL16-5-HF	MDL16-5.08-HF	
MDL17-5-VF	MDL17-5.08-VF	MDL17-5-HF	MDL17-5.08-HF	
MDL18-5-VF	MDL18-5.08-VF	MDL18-5-HF	MDL18-5.08-HF	
MDL19-5-VF	MDL19-5.08-VF	MDL19-5-HF	MDL19-5.08-HF	
MDL20-5-VF	MDL20-5.08-VF	MDL20-5-HF	MDL20-5.08-HF	
MDL21-5-VF	MDL21-5.08-VF	MDL21-5-HF	MDL21-5.08-HF	
MDL22-5-VF	MDL22-5.08-VF	MDL22-5-HF	MDL22-5.08-HF	

euro-block

SERIE/PRODUCT SERIES

	SMC04-L	SMC04-R
Passo / Pitch(mm)/ Rastermaß	5 mm	5 mm
Poli monoblocco/single mold poles/Polzahl	4	4
Vite / Screw / Schraube		
Corpo isolante / Housing / Gehäuse	PA66, UL 94V0	PA66, UL 94V0
Tensione nominale/Rated Voltage/Nennspannung	450V	450V
Corrente Nominale/Rated Current/Nennstrom	20A	20A
Sezione Nominale/Wire section / Nenn querschnitt		
Temperatura / Temperature / Temperatur	-40°C + 105°C	-40°C + 105°C
Coppia di torsione / Torque / Anzugsdrehmoment		
Lunghezza spellatura/ Stripping lenght/ Abisolierlänge		
VDE		
UL - cUL (file n. E342315)		
*Colore standard/ Standard colour/ Standardfarbe	GY(grey)	GY(grey)
Colori a richiesta/ Colours on request/ Farben auf Anfrage	BK (nero - black) / GY (grigio chiaro/light grey)	BK (nero - black) / GY (grigio chiaro/light grey)

*= da non specificare sul codice di ordinazione
Do not specify on ordering code
Muss im Bestellcode nicht angegeben werden

Per evitare sbalzi tra i morsetti ed i fori sul c.s. bisogna prevedere una interruzione quando il n. di poli è superiore a 30.

To avoid loss of pitch between terminal block and pcb it is necessary to interrupt the terminal row by poles higher than 30

Die Polzahl sollte maximal 30 betragen damit das Rastermaß von PCB und Leiterplattenklemme noch übereinstimmen

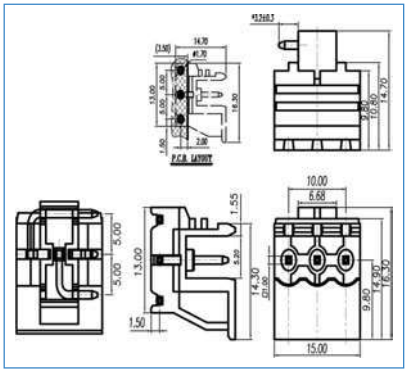

SMC04-5-R

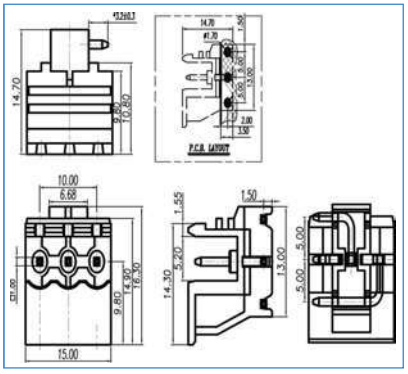

SMC04-5-L

COME ORDINARE
HOW TO ORDER / BESTELLNUMMER

Series	n. poles	pitch	version	color	custom

PASSO / PITCH / RASTERMAß

2 POLI

3 POLI

24 POLI

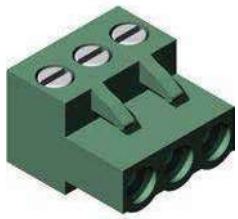

CF5

5,08 mm
2÷24
M2,5
PA66, UL 94V0
450V
15A
2,5 mm2 22÷14 AWG
-40°C + 105°C
0,4Nm (3,6 Lb in)
6 mm
GN(green)
BK (nero - black) / GY (grigio chiaro/light grey)

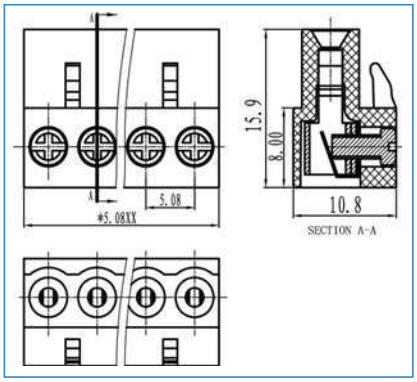

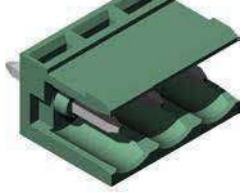

CM5-V

5,08 mm
2÷24
PA66, UL 94V0
450V
15A
-40°C + 105°C
GN(green)
BK (nero - black) / GY (grigio chiaro/light grey)

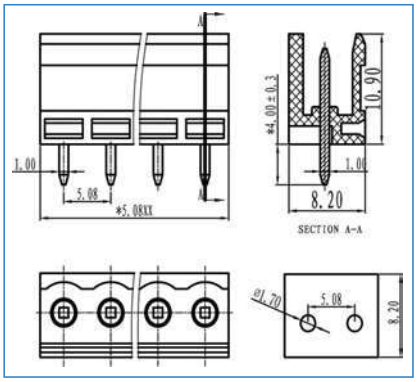

CM5-H

5,08 mm
2÷24
PA66, UL 94V0
450V
15A
-40°C + 105°C
GN(green)
BK (nero - black) / GY (grigio chiaro/light grey)

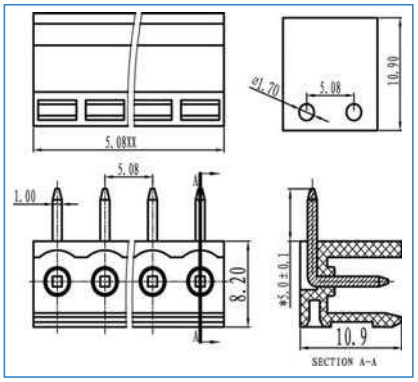

CF5	CM5-V	CM5-H
CF502-5.08	CM502-5.08-V	CM502-5.08-H
CF503-5.08	CM503-5.08-V	CM503-5.08-H
CF504-5.08	CM504-5.08-V	CM504-5.08-H
CF505-5.08	CM505-5.08-V	CM505-5.08-H
CF506-5.08	CM506-5.08-V	CM506-5.08-H
CF507-5.08	CM507-5.08-V	CM507-5.08-H
CF508-5.08	CM508-5.08-V	CM508-5.08-H
CF509-5.08	CM509-5.08-V	CM509-5.08-H
CF510-5.08	CM510-5.08-V	CM510-5.08-H
CF511-5.08	CM511-5.08-V	CM511-5.08-H
CF512-5.08	CM512-5.08-V	CM512-5.08-H
CF513-5.08	CM513-5.08-V	CM513-5.08-H
CF514-5.08	CM514-5.08-V	CM514-5.08-H
CF515-5.08	CM515-5.08-V	CM515-5.08-H
CF516-5.08	CM516-5.08-V	CM516-5.08-H
CF517-5.08	CM517-5.08-V	CM517-5.08-H
CF518-5.08	CM518-5.08-V	CM518-5.08-H
CF519-5.08	CM519-5.08-V	CM519-5.08-H
CF520-5.08	CM520-5.08-V	CM520-5.08-H
CF521-5.08	CM521-5.08-V	CM521-5.08-H
CF522-5.08	CM522-5.08-V	CM522-5.08-H
CF523-5.08	CM523-5.08-V	CM523-5.08-H
CF524-5.08	CM524-5.08-V	CM524-5.08-H

euro-block

CRSI

SERIE/PRODUCT SERIES

Passo / Pitch(mm)/ Rastemaß	5,08 mm
Poli monoblocco/single mold poles/Polzhal	2÷24
Vite / Screw / Schraube	M3
Corpo isolante / Housing / Gehäuse	PA66, UL 94V0
Tensione nominale/Rated Voltage/Nennspannung	450V
Corrente Nominale/Rated Current/Nennstrom	20A
Sezione Nominale/Wire section / Nennqueschnitt	2,5 mm2 28÷14 AWG
Temperatura / Temperature / Temperatur	-40°C + 105°C
Coppia di torsione / Torque / Anzugsdrehmoment	0,5Nm (4,5 Lb in)
Lunghezza spellatura/ Stripping lenght/ Abisolierlänge	7 mm
VDE	
UL - cUL (file n. E342315)	
*Colore standard/ Standard colour/ Standardfarbe	GN(green)
Colori a richiesta/ Colours on request/ Farben auf Anfrage	BK (nero - black) / GY (grigio chiaro/light grey)

*= da non specificare sul codice di ordinazione
To not specify on ordering code
Muss im Bestellcode nicht angegeben werden

Per evitare sbalzi tra i morsetti ed i fori sul c.s. bisogna prevedere una interruzione quando il n. di poli è superiore a 30.

To avoid loss of pitch between terminal block and pcb it is necessary to interrupt the terminal row by poles higher than 30

Die Polzahl sollte maximal 30 betragen damit das Rastermaß von PCB und Leiterplattenklemme noch übereinstimmen

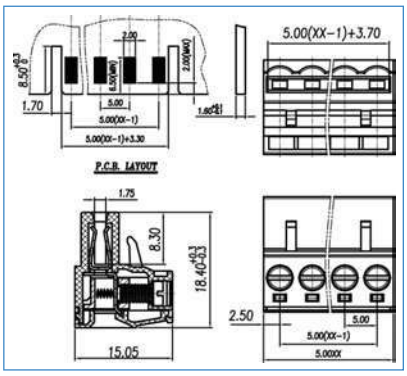

COME ORDINARE
HOW TO ORDER / BESTELLCODE

Series	n. poles	pitch	version	color	custom

PASSO / PITCH / RASTERMAß

2 POLI	CRSI02-5.08
3 POLI	CRSI03-5.08
	CRSI04-5.08
	CRSI05-5.08
	CRSI06-5.08
	CRSI07-5.08
	CRSI08-5.08
	CRSI09-5.08
	CRSI10-5.08
	CRSI11-5.08
	CRSI12-5.08
	CRSI13-5.08
	CRSI14-5.08
	CRSI15-5.08
	CRSI16-5.08
	CRSI17-5.08
	CRSI18-5.08
	CRSI19-5.08
	CRSI20-5.08
	CRSI21-5.08
	CRSI22-5.08
	CRSI23-5.08
24 POLI	CRSI24-5.08

Accessori
Accessories

SCCRF2

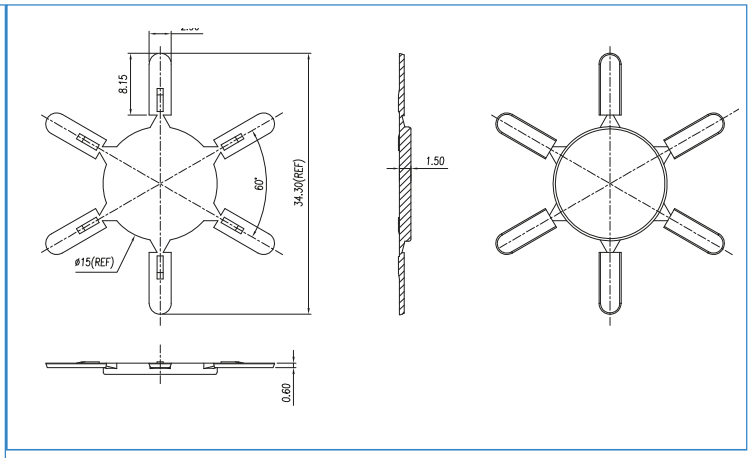

Compatibile con passi: 5; 5.08; 7.5; 7.62
Compatible with pitches: 5; 5.08; 7.5; 7.62

SCCCM2

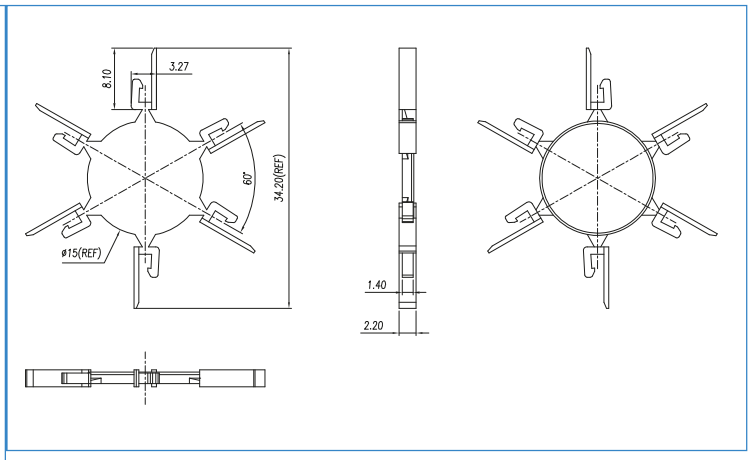

Compatibile con passi: 5; 5.08; 7.5; 7.62
Compatible with pitches: 5; 5.08; 7.5; 7.62

SCCCM1

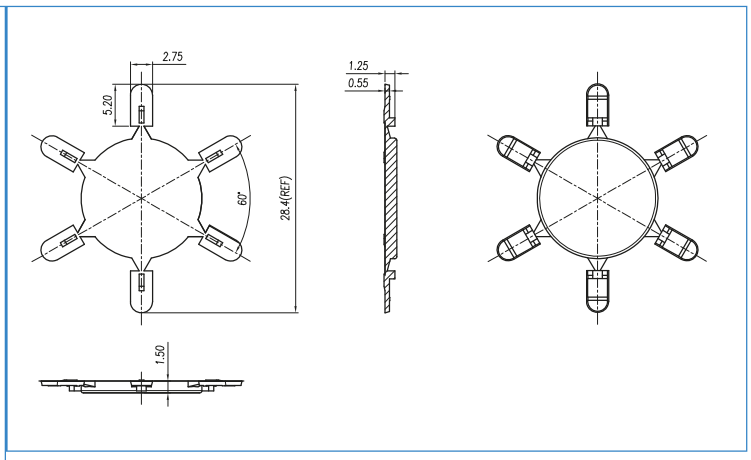

Compatibile con passi: 3.5; 3.81
Compatible with pitches: 3.5; 3.81

Connettori potenza
Power connectors

euro-block

SERIE/PRODUCT SERIES

	CFP-7.62	CFP-7.62-F
Passo / Pitch(mm)/ Rastermaß	7,62 mm	7,62 mm
Poli monoblocco/single mold poles/Polzahl	2÷12	2÷12
Vite / Screw / Schraube	M3	M3
Corpo isolante / Housing / Gehäuse	PA66, UL 94V0	PA66, UL 94V0
Tensione nominale/Rated Voltage/Nennspannung	400V	400V
Corrente Nominale/Rated Current/Nennstrom	32A	32A
Sezione Nominale/Wire section / Nenn querschnitt	4 mm2 28÷10 AWG	4 mm2 28÷10 AWG
Temperatura / Temperature / Temperatur	-40°C + 105°C	-40°C + 105°C
Coppia di torsione / Torque / Anzugsdrehmoment	0,5Nm (4,5 Lb in)	0,5Nm (4,5 Lb in)
Lunghezza spellatura/ Stripping lenght/ Abisolierlänge	7 mm	7 mm
VDE		
UL - cUL (file n. E342315)	30A-300V	30A-300V
*Colore standard/ Standard colour/ Standardfarbe	GN(green)	GN(green)
Colori a richiesta/ Colours on request/ Farben auf Anfrage	BK-GY	BK-GY

*= da non specificare sul codice di ordinazione
Do not specify on ordering code
Muss im Bestellcode nicht angegeben werden

Per evitare sbalzi tra i morsetti ed i fori sul c.s. bisogna prevedere una interruzione quando il n. di poli è superiore a 30.

To avoid loss of pitch between terminal block and pcb it is necessary to interrupt the terminal row by poles higher than 30

Die Polzahl sollte maximal 30 betragen damit das Rastermaß von PCB und Leiterplattenklemme noch übereinstimmen

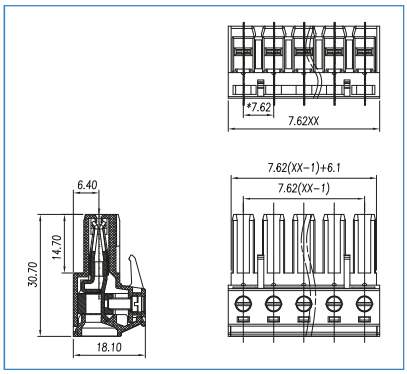

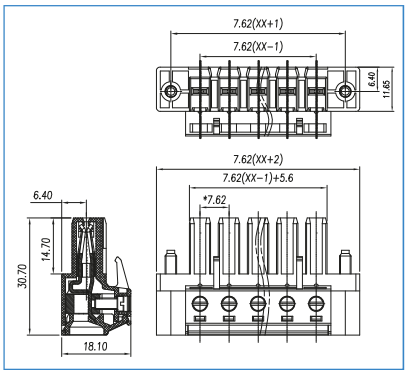

COME ORDINARE
HOW TO ORDER / BESTELLNUMMER

Series	n. poles	pitch	version	color	custom

PASSO / PITCH / RASTERMAß

2 POLI	CFP02-7.62	CFP02-7.62-F
3 POLI	CFP03-7.62	CFP03-7.62-F
	CFP04-7.62	CFP04-7.62-F
	CFP05-7.62	CFP05-7.62-F
	CFP06-7.62	CFP06-7.62-F
	CFP07-7.62	CFP07-7.62-F
	CFP08-7.62	CFP08-7.62-F
	CFP09-7.62	CFP09-7.62-F
	CFP10-7.62	CFP10-7.62-F
	CFP11-7.62	CFP11-7.62-F
	CFP12-7.62	CFP12-7.62-F
24 POLI		

CMP-7.62-CH

7,62 mm
2÷12
PA66, UL 94V0
400V
32A
-40°C + 105°C
7 mm
30A-300V
GN(green)
BK-GY

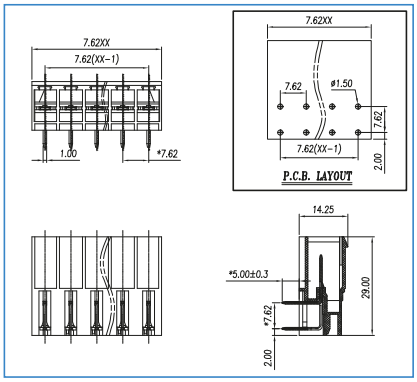

CMP-7.62-CV

7,62 mm
2÷12
PA66, UL 94V0
400V
32A
-40°C + 105°C
7 mm
30A-300V
GN(green)
BK-GY

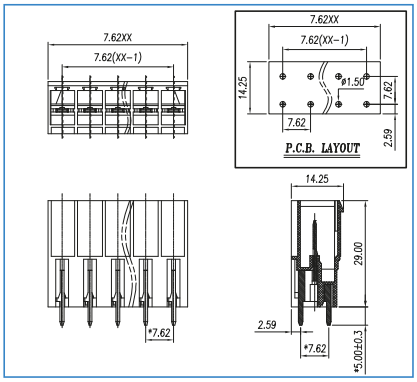

CMP-7.62-VF

7,62 mm
2÷12
PA66, UL 94V0
400V
32A
-40°C + 105°C
7 mm
30A-300V
GN(green)
BK-GY

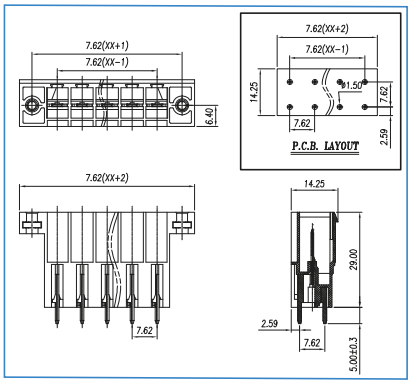

CMP02-7.62-CH	CMP02-7.62-CV	CMP03-7.62-VF
CMP03-7.62-CH	CMP03-7.62-CV	CMP04-7.62-VF
CMP04-7.62-CH	CMP04-7.62-CV	CMP05-7.62-VF
CMP05-7.62-CH	CMP05-7.62-CV	CMP06-7.62-VF
CMP06-7.62-CH	CMP06-7.62-CV	CMP07-7.62-VF
CMP07-7.62-CH	CMP07-7.62-CV	CMP08-7.62-VF
CMP08-7.62-CH	CMP08-7.62-CV	CMP09-7.62-VF
CMP09-7.62-CH	CMP09-7.62-CV	CMP10-7.62-VF
CMP10-7.62-CH	CMP10-7.62-CV	CMP11-7.62-VF
CMP11-7.62-CH	CMP11-7.62-CV	CMP12-7.62-VF
CMP12-7.62-CH	CMP12-7.62-CV	

euro-block

SERIE/PRODUCT SERIES	CMP-7.62-VFF	CMP-7.62-HF
Passo / Pitch(mm)/ Rastermaß	7,62 mm	7,62 mm
Poli monoblocco/single mold poles/Polzahl	2÷12	2÷12
Vite / Screw / Schraube		
Corpo isolante / Housing / Gehäuse	PA66, UL 94V0	PA66, UL 94V0
Tensione nominale/Rated Voltage/Nennspannung	400V	400V
Corrente Nominale/Rated Current/Nennstrom	32A	32A
Sezione Nominale/Wire section / Nenn querschnitt		
Temperatura / Temperature / Temperatur	-40°C + 105°C	-40°C + 105°C
Coppia di torsione / Torque / Anzugsdrehmoment		
Lunghezza spellatura/ Stripping lenght/ Abisolierlänge	7 mm	7 mm
VDE		
UL - cUL (file n. E342315)	30A-300V	30A-300V
*Colore standard/ Standard colour/ Standardfarbe	GN(green)	GN(green)
	BK-GY	BK-GY

Colori a richiesta/ Colours on request/ Farben auf Anfrage
*= da non specificare sul codice di ordinazione
Do not specify on ordering code
Muss im Bestellcode nicht angegeben werden

Per evitare sbalzi tra i morsetti ed i fori sul c.s. bisogna prevedere una interruzione quando il n. di poli è superiore a 30.

To avoid loss of pitch between terminal block and pcb it is necessary to interrupt the terminal row by poles higher than 30

Die Polzahl sollte maximal 30 betragen damit das Rastermaß von PCB und Leiterplattenklemme noch übereinstimmen

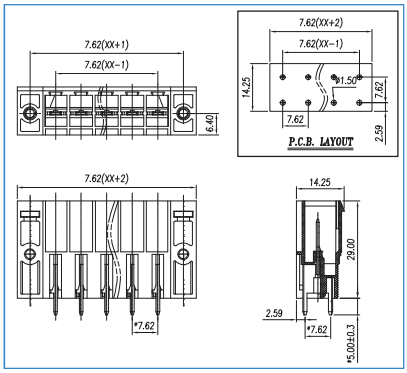

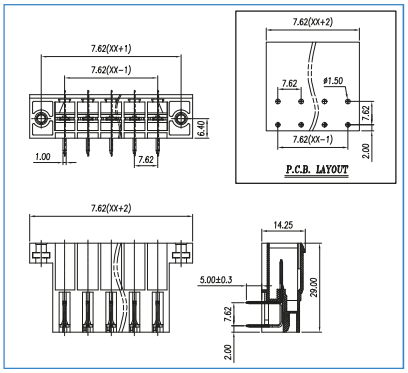

COME ORDINARE
HOW TO ORDER / BESTELLNUMMER

Series	n. poles	pitch	version	color	custom

PASSO / PITCH / RASTERMAß

2 POLI	CMP02-7.62-VFF	CMP02-7.62-HF
3 POLI	CMP03-7.62-VFF	CMP03-7.62-HF
	CMP04-7.62-VFF	CMP04-7.62-HF
	CMP05-7.62-VFF	CMP05-7.62-HF
	CMP06-7.62-VFF	CMP06-7.62-HF
	CMP07-7.62-VFF	CMP07-7.62-HF
	CMP08-7.62-VFF	CMP08-7.62-HF
	CMP09-7.62-VFF	CMP09-7.62-HF
	CMP10-7.62-VFF	CMP10-7.62-HF
	CMP11-7.62-VFF	CMP11-7.62-HF
	CMP12-7.62-VFF	CMP12-7.62-HF
24 POLI		

CMP-7.62-HFF

7,62 mm
2÷12
PA66, UL 94V0
400V
32A
-40°C + 105°C
7 mm
30A-300V
GN(green)
BK-GY

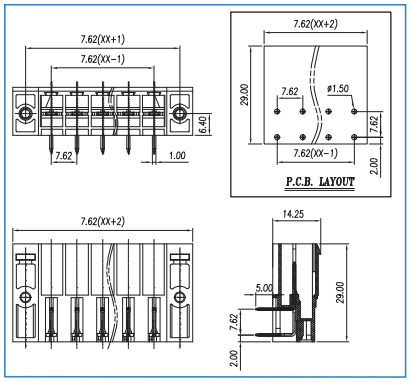

CFP-10.16

10,16 mm
2÷12
M4
PA66, UL 94V0
1000V
76A
16 mm2 20÷6 AWG
-40°C + 105°C
1,2Nm (10,16 Lb in)
7 mm
55A-300V
GN(green)
BK-GY

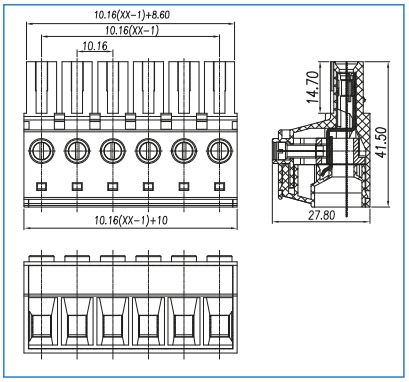

CFP-10.16-F

10,16 mm
2÷12
M4
PA66, UL 94V0
1000V
76A
16 mm2 20÷6 AWG
-40°C + 105°C
1,2Nm (10,16 Lb in)
7 mm
55A-300V
GN(green)
BK-GY

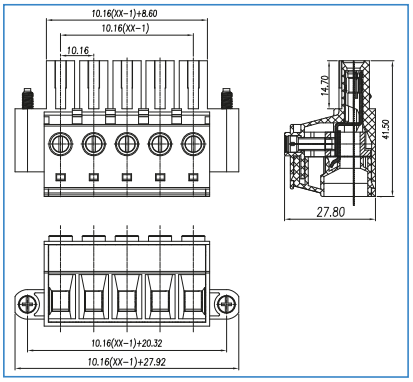

CMP03-7.62-HFF	CFP03-10.16	CFP03-10.16-F
CMP04-7.62-HFF	CFP04-10.16	CFP04-10.16-F
CMP05-7.62-HFF	CFP05-10.16	CFP05-10.16-F
CMP06-7.62-HFF	CFP06-10.16	CFP06-10.16-F
CMP07-7.62-HFF	CFP07-10.16	CFP07-10.16-F
CMP08-7.62-HFF	CFP08-10.16	CFP08-10.16-F
CMP09-7.62-HFF	CFP09-10.16	CFP09-10.16-F
CMP10-7.62-HFF	CFP10-10.16	CFP10-10.16-F
CMP11-7.62-HFF	CFP11-10.16	CFP11-10.16-F
CMP12-7.62-HFF	CFP12-10.16	CFP12-10.16-F

euro-block

SERIE/PRODUCT SERIES

	CMP-10.16-CV	CMP-10.16-CH
Passo / Pitch(mm)/ Rastermaß	10,16 mm	10,16 mm
Poli monoblocco/single mold poles/Polzahl	2÷12	2÷12
Vite / Screw / Schraube		
Corpo isolante / Housing / Gehäuse	PA66, UL 94V0	PA66, UL 94V0
Tensione nominale/Rated Voltage/Nennspannung	1000V	1000V
Corrente Nominale/Rated Current/Nennstrom	76A	76A
Sezione Nominale/Wire section / Nenn querschnitt		
Temperatura / Temperature / Temperatur	-40°C + 105°C	-40°C + 105°C
Coppia di torsione / Torque / Anzugsdrehmoment		
Lunghezza spellatura/ Stripping lenght/ Abisolierlänge	7 mm	7 mm
VDE		
UL - cUL (file n. E342315)	55A-300V	55A-300V
*Colore standard/ Standard colour/ Standardfarbe	GN(green)	GN(green)
	BK-GY	BK-GY

Colori a richiesta/ Colours on request/ Farben auf Anfrage
*= da non specificare sul codice di ordinazione
Do not specify on ordering code
Muss im Bestellcode nicht angegeben werden

Per evitare sbalzi tra i morsetti ed i fori sul c.s. bisogna prevedere una interruzione quando il n. di poli è superiore a 30.

To avoid loss of pitch between terminal block and pcb it is necessary to interrupt the terminal row by poles higher than 30

Die Polzahl sollte maximal 30 betragen damit das Rastermaß von PCB und Leiterplattenklemme noch übereinstimmen

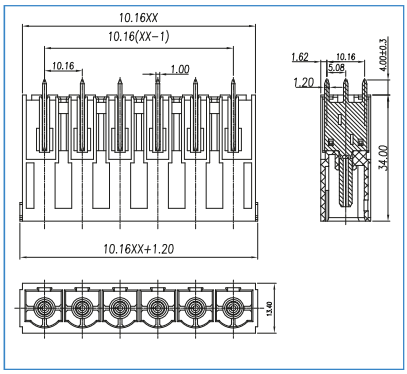

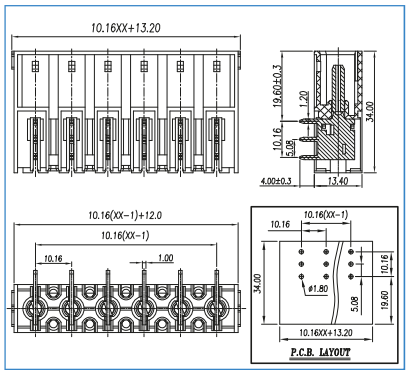

COME ORDINARE
HOW TO ORDER / BESTELLNUMMER

Series	n. poles	pitch	version	color	custom

PASSO / PITCH / RASTERMAß

		MRM1-2.5-V
2 POLI	CMP02-10.16-CV	CMP03-10.16-CH
3 POLI	CMP03-10.16-CV	CMP04-10.16-CH
	CMP04-10.16-CV	CMP05-10.16-CH
	CMP05-10.16-CV	CMP06-10.16-CH
	CMP06-10.16-CV	CMP07-10.16-CH
	CMP07-10.16-CV	CMP08-10.16-CH
	CMP08-10.16-CV	CMP09-10.16-CH
	CMP09-10.16-CV	CMP10-10.16-CH
	CMP10-10.16-CV	CMP11-10.16-CH
	CMP11-10.16-CV	CMP12-10.16-CH
	CMP12-10.16-CV	
24 POLI		

CMP-10.16-VF

10,16 mm
2÷12
PA66, UL 94V0
1000V
76A
-40°C + 105°C
7 mm
55A-300V
GN(green)
BK-GY

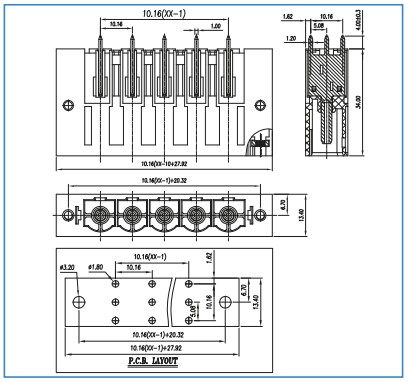

CMP-10.16-HF

10,16 mm
2÷12
PA66, UL 94V0
1000V
76A
-40°C + 105°C
7 mm
55A-300V
GN(green)
BK-GY

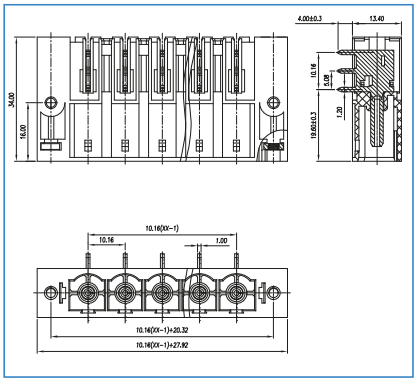

CMP03-10.16-VF	CMP02-10.16-HF
CMP04-10.16-VF	CMP03-10.16-HF
CMP05-10.16-VF	CMP04-10.16-HF
CMP06-10.16-VF	CMP05-10.16-HF
CMP07-10.16-VF	CMP06-10.16-HF
CMP08-10.16-VF	CMP07-10.16-HF
CMP09-10.16-VF	CMP08-10.16-HF
CMP10-10.16-VF	CMP09-10.16-HF
CMP11-10.16-VF	CMP10-10.16-HF
CMP12-10.16-VF	CMP11-10.16-HF
	CMP12-10.16-HF

Connettori con gancio barra din

Din rail hook connectors

euro-block

SERIE/PRODUCT SERIES	GCPS-5.08	GCPS-5.08-F
Passo / Pitch(mm)/ Rastermaß	5,08 mm	5,08 mm
Poli monoblocco/single mold poles/Polzahl	6÷24	6÷24
Vite / Screw / Schraube	M3	M3
Corpo isolante / Housing / Gehäuse	PA66, UL 94V0	PA66, UL 94V0
Tensione nominale/Rated Voltage/Nennspannung	320V	320V
Corrente Nominale/Rated Current/Nennstrom	12A	12A
Sezione Nominale/Wire section / Nenn querschnitt	2,5 mm2 28÷14 AWG	2,5 mm2 28÷14 AWG
Temperatura / Temperature / Temperatur	-40°C + 105°C	-40°C + 105°C
Coppia di torsione / Torque / Anzugsdrehmoment	0,5Nm (4,5 Lb in)	0,5Nm (4,5 Lb in)
Lunghezza spellatura/ Stripping lenght/ Abisolierlänge	7 mm	7 mm
VDE		
UL - cUL (file n. E342315)	15A-300V	15A-300V
*Colore standard/ Standard colour/ Standardfarbe	GN(green)	GN(green)
	BK (nero - black) / GY (grigio chiaro/light grey)	BK (nero - black) / GY (grigio chiaro/light grey)

Colori a richiesta/ Colours on request/ Farben auf Anfrage
*= da non specificare sul codice di ordinazione
Do not specify on ordering code
Muss im Bestellcode nicht angegeben werden

Per evitare sbalzi tra i morsetti ed i fori sul c.s. bisogna prevedere una interruzione quando il n. di poli è superiore a 30.

To avoid loss of pitch between terminal block and pcb it is necessary to interrupt the terminal row by poles higher than 30

Die Polzahl sollte maximal 30 betragen damit das Rastermaß von PCB und Leiterplattenklemme noch übereinstimmen

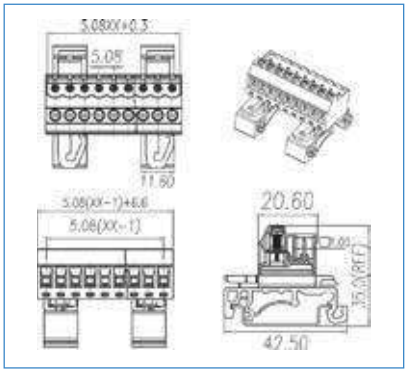

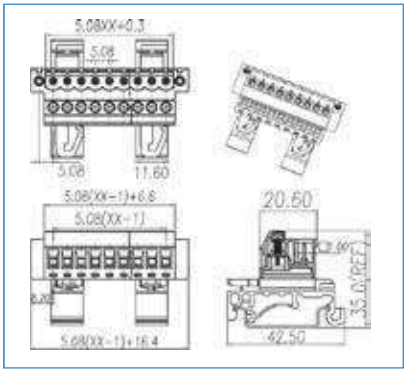

COME ORDINARE
HOW TO ORDER / BESTELLNUMMER

Series	n. poles	pitch	version	color	custom

PASSO / PITCH / RASTERMAß

6 POLI	GCPS06-5.08	GCPS06-5.08-F
7 POLI	GCPS07-5.08	GCPS07-5.08-F
	GCPS08-5.08	GCPS08-5.08-F
	GCPS09-5.08	GCPS09-5.08-F
	GCPS10-5.08	GCPS10-5.08-F
	GCPS11-5.08	GCPS11-5.08-F
	GCPS12-5.08	GCPS12-5.08-F
	GCPS13-5.08	GCPS13-5.08-F
	GCPS14-5.08	GCPS14-5.08-F
	GCPS15-5.08	GCPS15-5.08-F
	GCPS16-5.08	GCPS16-5.08-F
	GCPS17-5.08	GCPS17-5.08-F
	GCPS18-5.08	GCPS18-5.08-F
	GCPS19-5.08	GCPS19-5.08-F
	GCPS20-5.08	GCPS20-5.08-F
	GCPS21-5.08	GCPS21-5.08-F
	GCPS22-5.08	GCPS22-5.08-F
	GCPS23-5.08	GCPS23-5.08-F
	GCPS24-5.08	GCPS24-5.08-F
24 POLI		

PCPS-5.08

5,08 mm
6÷24
M3
PBT, UL 94V0
320V
12A
2,5 mm2 28÷14 AWG
-40°C + 105°C
0,5Nm (4,5 Lb in)
7 mm
c UL us 15A-300V
GN (green)
BK (nero - black) / GY (grigio chiaro/light grey)

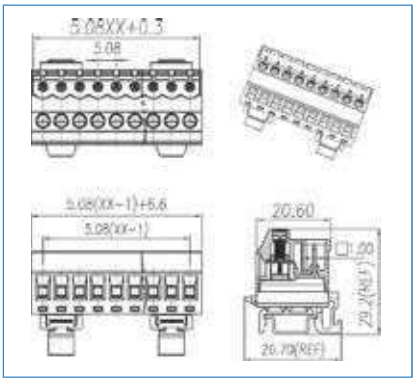

PCPS-5.08-F

5,08 mm
6÷24
M3
PBT, UL 94V0
320V
12A
2,5 mm2 28÷14 AWG
-40°C + 105°C
0,5Nm (4,5 Lb in)
7 mm
c UL us 15A-300V
GN (green)
BK (nero - black) / GY (grigio chiaro/light grey)

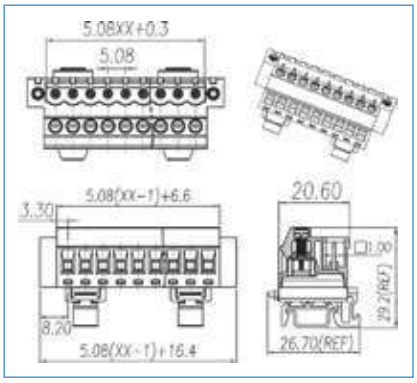

PCRS-5

5 mm
6÷24
M3
PBT, UL 94V0
320V
12A
2,5 mm2 28÷14 AWG
-40°C + 105°C
0,5Nm (4,5 Lb in)
7 mm
c UL us 15A-300V
GN (green)
BK (nero - black) / GY (grigio chiaro/light grey)

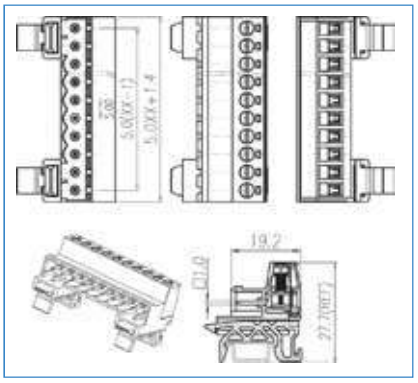

PCPS06-5.08	PCPS06-5.08-F	PCRS06-5
PCPS07-5.08	PCPS07-5.08-F	PCRS07-5
PCPS08-5.08	PCPS08-5.08-F	PCRS08-5
PCPS09-5.08	PCPS09-5.08-F	PCRS09-5
PCPS10-5.08	PCPS10-5.08-F	PCRS10-5
PCPS11-5.08	PCPS11-5.08-F	PCRS11-5
PCPS12-5.08	PCPS12-5.08-F	PCRS12-5
PCPS13-5.08	PCPS13-5.08-F	PCRS13-5
PCPS14-5.08	PCPS14-5.08-F	PCRS14-5
PCPS15-5.08	PCPS15-5.08-F	PCRS15-5
PCPS16-5.08	PCPS16-5.08-F	PCRS16-5
PCPS17-5.08	PCPS17-5.08-F	PCRS17-5
PCPS18-5.08	PCPS18-5.08-F	PCRS18-5
PCPS19-5.08	PCPS19-5.08-F	PCRS19-5
PCPS20-5.08	PCPS20-5.08-F	PCRS20-5
PCPS21-5.08	PCPS21-5.08-F	PCRS21-5
PCPS22-5.08	PCPS22-5.08-F	PCRS22-5
PCPS23-5.08	PCPS23-5.08-F	PCRS23-5
PCPS24-5.08	PCPS24-5.08-F	PCRS24-5

euro-block

SERIE/PRODUCT SERIES

	PCRS-5-F	PCRS-5.08
Passo / Pitch(mm)/ Rastermaß	5 mm	5,08 mm
Poli monoblocco/single mold poles/Polzahl	6÷24	6÷24
Vite / Screw / Schraube	M3	M3
Corpo isolante / Housing / Gehäuse	PBT, UL 94V0	PBT, UL 94V0
Tensione nominale/Rated Voltage/Nennspannung	320V	320V
Corrente Nominale/Rated Current/Nennstrom	12A	12A
Sezione Nominale/Wire section / Nenn querschnitt	2,5 mm2 28÷14 AWG	2,5 mm2 28÷14 AWG
Temperatura / Temperature / Temperatur	-40°C + 105°C	-40°C + 105°C
Coppia di torsione / Torque / Anzugsdrehmoment	0,5Nm (4,5 Lb in)	0,5Nm (4,5 Lb in)
Lunghezza spellatura/ Stripping lenght/ Abisolierlänge	7 mm	7 mm
VDE		
UL - cUL (file n. E342315)	15A-300V	15A-300V
*Colore standard/ Standard colour/ Standardfarbe	GN(green)	GN(green)
	BK (nero/black) / GY (grigio chiaro/light grey)	BK (nero/black) / GY (grigio chiaro/light grey)

Colori a richiesta/ Colours on request/ Farben auf Anfrage
*= da non specificare sul codice di ordinazione
Do not specify on ordering code
Muss im Bestellcode nicht angegeben werden

Per evitare sbalzi tra i morsetti ed i fori sul c.s. bisogna prevedere una interruzione quando il n. di poli è superiore a 30.

To avoid loss of pitch between terminal block and pcb it is necessary to interrupt the terminal row by poles higher than 30

Die Polzahl sollte maximal 30 betragen damit das Rastermaß von PCB und Leiterplattenklemme noch übereinstimmen

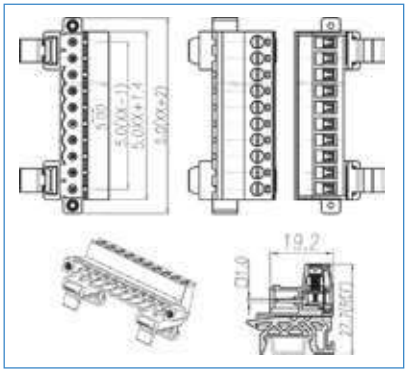

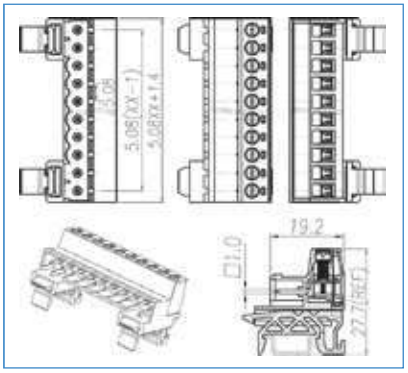

COME ORDINARE
HOW TO ORDER / BESTELLNUMMER

Series	n. poles	pitch	version	color	custom

PASSO / PITCH / RASTERMAß

6 POLI	PCRS06-5-F	PCRS06-5.08
7 POLI	PCRS07-5-F	PCRS07-5.08
	PCRS08-5-F	PCRS08-5.08
	PCRS09-5-F	PCRS09-5.08
	PCRS10-5-F	PCRS10-5.08
	PCRS11-5-F	PCRS11-5.08
	PCRS12-5-F	PCRS12-5.08
	PCRS13-5-F	PCRS13-5.08
	PCRS14-5-F	PCRS14-5.08
	PCRS15-5-F	PCRS15-5.08
	PCRS16-5-F	PCRS16-5.08
	PCRS17-5-F	PCRS17-5.08
	PCRS18-5-F	PCRS18-5.08
	PCRS19-5-F	PCRS19-5.08
	PCRS20-5-F	PCRS20-5.08
	PCRS21-5-F	PCRS21-5.08
	PCRS22-5-F	PCRS22-5.08
	PCRS23-5-F	PCRS23-5.08
	PCRS24-5-F	PCRS24-5.08
24 POLI		

PCRS-5.08-F

5,08 mm
6÷24
M3
PA66, UL 94V0
320V
12A
2,5 mm2 28÷14 AWG
-40°C + 105°C
0,5Nm (4,5 Lb in)
7 mm
15A-300V
GN(green)
BK (nero - black) / GY (grigio chiaro/light grey)

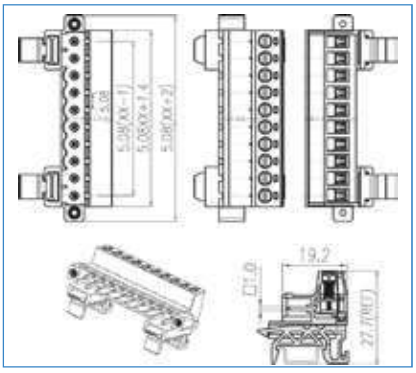

GCRS-5

5 mm
6÷24
M3
PA66, UL 94V0
320V
12A
2,5 mm2 28÷14 AWG
-40°C + 105°C
0,5Nm (4,5 Lb in)
7 mm
15A-300V
GN(green)
BK (nero - black) / GY (grigio chiaro/light grey)

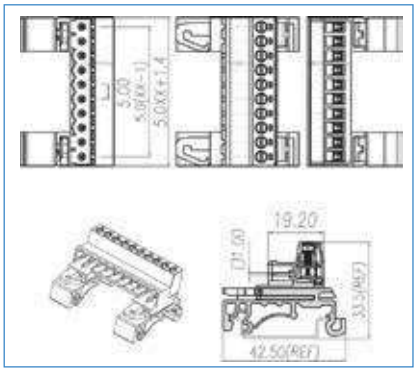

GCRS-5-F

5 mm
6÷24
M3
PA66, UL 94V0
320V
12A
2,5 mm2 28÷14 AWG
-40°C + 105°C
0,5Nm (4,5 Lb in)
7 mm
15A-300V
GN(green)
BK (nero - black) / GY (grigio chiaro/light grey)

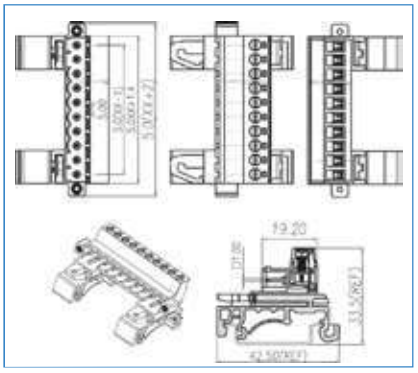

PCRS06-5.08-F	GCRS06-5	GCRS06-5-F
PCRS07-5.08-F	GCRS07-5	GCRS07-5-F
PCRS08-5.08-F	GCRS08-5	GCRS08-5-F
PCRS09-5.08-F	GCRS09-5	GCRS09-5-F
PCRS10-5.08-F	GCRS10-5	GCRS10-5-F
PCRS11-5.08-F	GCRS11-5	GCRS11-5-F
PCRS12-5.08-F	GCRS12-5	GCRS12-5-F
PCRS13-5.08-F	GCRS13-5	GCRS13-5-F
PCRS14-5.08-F	GCRS14-5	GCRS14-5-F
PCRS15-5.08-F	GCRS15-5	GCRS15-5-F
PCRS16-5.08-F	GCRS16-5	GCRS16-5-F
PCRS17-5.08-F	GCRS17-5	GCRS17-5-F
PCRS18-5.08-F	GCRS18-5	GCRS18-5-F
PCRS19-5.08-F	GCRS19-5	GCRS19-5-F
PCRS20-5.08-F	GCRS20-5	GCRS20-5-F
PCRS21-5.08-F	GCRS21-5	GCRS21-5-F
PCRS22-5.08-F	GCRS22-5	GCRS22-5-F
PCRS23-5.08-F	GCRS23-5	GCRS23-5-F
PCRS24-5.08-F	GCRS24-5	GCRS24-5-F

euro-block

SERIE/PRODUCT SERIES

	GCRS-5.08	GCRS-5.08-F
Passo / Pitch(mm)/ Rastermaß	5,08 mm	5,08 mm
Poli monoblocco/single mold poles/Polzahl	6÷24	6÷24
Vite / Screw / Schraube	M3	M3
Corpo isolante / Housing / Gehäuse	PA66, UL 94V0	PA66, UL 94V0
Tensione nominale/Rated Voltage/Nennspannung	320V	320V
Corrente Nominale/Rated Current/Nennstrom	12A	12A
Sezione Nominale/Wire section / Nenn querschnitt	2,5 mm2 28÷14 AWG	2,5 mm2 28÷14 AWG
Temperatura / Temperature / Temperatur	-40°C + 105°C	-40°C + 105°C
Coppia di torsione / Torque / Anzugsdrehmoment	0,5Nm (4,5 Lb in)	0,5Nm (4,5 Lb in)
Lunghezza spellatura/ Stripping lenght/ Abisolierlänge	7 mm	7 mm
VDE		
UL - cUL (file n. E342315)	15A-300V	15A-300V
*Colore standard/ Standard colour/ Standardfarbe	GN(green)	GN(green)
	BK (nero - black) / GY (grigio chiaro/light grey)	BK (nero - black) / GY (grigio chiaro/light grey)

Colori a richiesta/ Colours on request/ Farben auf Anfrage
*= da non specificare sul codice di ordinazione
Do not specify on ordering code
Muss im Bestellcode nicht angegeben werden

Per evitare sbalzi tra i morsetti ed i fori sul c.s. bisogna prevedere una interruzione quando il n. di poli è superiore a 30.

To avoid loss of pitch between terminal block and pcb it is necessary to interrupt the terminal row by poles higher than 30

Die Polzahl sollte maximal 30 betragen damit das Rastermaß von PCB und Leiterplattenklemme noch übereinstimmen

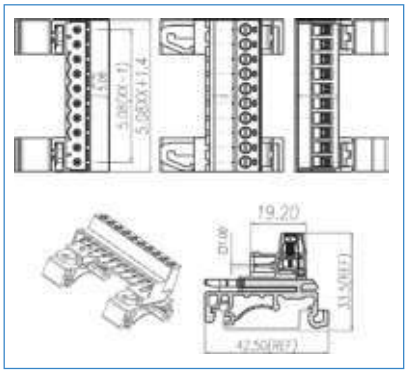

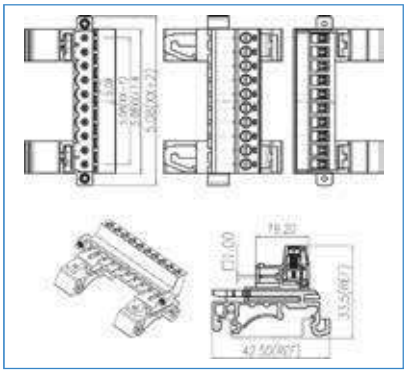

COME ORDINARE
HOW TO ORDER / BESTELLNUMMER

Series	n. poles	pitch	version	color	custom

PASSO / PITCH / RASTERMAß

6 POLI	GCRS06-5.08	GCRS06-5.08-F
7 POLI	GCRS07-5.08	GCRS07-5.08-F
	GCRS08-5.08	GCRS08-5.08-F
	GCRS09-5.08	GCRS09-5.08-F
	GCRS10-5.08	GCRS10-5.08-F
	GCRS11-5.08	GCRS11-5.08-F
	GCRS12-5.08	GCRS12-5.08-F
	GCRS13-5.08	GCRS13-5.08-F
	GCRS14-5.08	GCRS14-5.08-F
	GCRS15-5.08	GCRS15-5.08-F
	GCRS16-5.08	GCRS16-5.08-F
	GCRS17-5.08	GCRS17-5.08-F
	GCRS18-5.08	GCRS18-5.08-F
	GCRS19-5.08	GCRS19-5.08-F
	GCRS20-5.08	GCRS20-5.08-F
	GCRS21-5.08	GCRS21-5.08-F
	GCRS22-5.08	GCRS22-5.08-F
	GCRS23-5.08	GCRS23-5.08-F
	GCRS24-5.08	GCRS24-5.08-F
24 POLI		

Connettori polarizzati
Polarized connectors

euro-block

SERIE/PRODUCT SERIES	CFP1-3.5	CFP1-3.5-EJ
Passo / Pitch(mm)/ Rastermaß	3,5 mm	3,5 mm
Poli monoblocco/single mold poles/Polzahl	2÷24	2÷24
Vite / Screw / Schraube		
Corpo isolante / Housing / Gehäuse	PA66, UL 94V0	PA66, UL 94V0
Tensione nominale/Rated Voltage/Nennspannung	130V	130V
Corrente Nominale/Rated Current/Nennstrom	10A	10A
Sezione Nominale/Wire section /Nennquerschnitt	1,5 mm2 28÷14 AWG	1,5 mm2 28÷14 AWG
Temperatura /Temperature /Temperatur	-40°C + 105°C	-40°C + 105°C
Coppia di torsione /Torque /Anzugsdrehmoment		
Lunghezza spellatura/Stripping lenght/Abisolierlänge	7 mm	7 mm
VDE		
UL - cUL (file n.E34235)	10A-300V	10A-300V
*Colore standard/ Standard colour/ Standardfarbe	LGY (light grey)	LGY (light grey)
Colori a richiesta/Colours on request/Farben auf Anfrage		

*= da non specificare sul codice di ordinazione
Do not specify on ordering code
Muss im Bestellcode nicht angegeben werden

Per evitare sbalzi tra i morsetti ed i fori sul c.s. bisogna prevedere una interruzione quando il n. di poli è superiore a 30.

To avoid loss of pitch between terminal block and pcb it is necessary to interrupt the terminal row by poles higher than 30

Die Polzahl sollte maximal 30 betragen damit das Rastermaß von PCB und Leiterplattenklemme noch übereinstimmen

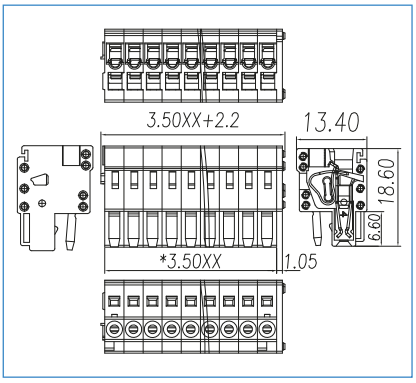

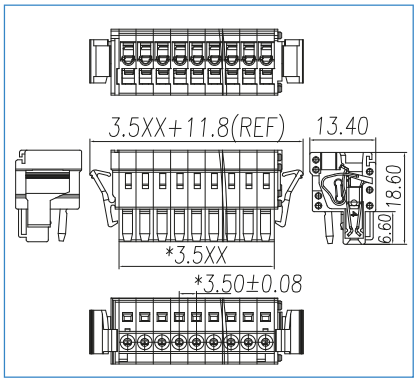

COME ORDINARE
HOW TO ORDER / BESTELLNUMMER

Series	n. poles	pitch	version	color	custom

PASSO / PITCH / RASTERMAß

2 POLI	CFP102-3.5	CFP102-3.5-EJ
3 POLI	CFP103-3.5	CFP103-3.5-EJ
	CFP104-3.5	CFP104-3.5-EJ
	CFP105-3.5	CFP105-3.5-EJ
	CFP106-3.5	CFP106-3.5-EJ
	CFP107-3.5	CFP107-3.5-EJ
	CFP108-3.5	CFP108-3.5-EJ
	CFP109-3.5	CFP109-3.5-EJ
	CFP110-3.5	CFP110-3.5-EJ
	CFP111-3.5	CFP111-3.5-EJ
	CFP112-3.5	CFP112-3.5-EJ
	CFP113-3.5	CFP113-3.5-EJ
	CFP114-3.5	CFP114-3.5-EJ
	CFP115-3.5	CFP115-3.5-EJ
	CFP116-3.5	CFP116-3.5-EJ
	CFP117-3.5	CFP117-3.5-EJ
	CFP118-3.5	CFP118-3.5-EJ
	CFP119-3.5	CFP119-3.5-EJ
	CFP120-3.5	CFP120-3.5-EJ
	CFP121-3.5	CFP121-3.5-EJ
	CFP122-3.5	CFP122-3.5-EJ
	CFP123-3.5	CFP123-3.5-EJ
24 POLI	CFP124-3.5	CFP124-3.5-EJ

CFP1-3.81	CFP1-3.81-EJ	CMP1-3.5-CV
3,81 mm	3,81 mm	3,5 mm
2÷24	2÷24	2÷24
PA66, UL 94V0	PA66, UL 94V0	PA66, UL 94V0
130V	130V	130V
10A	10A	10A
1,5 mm2 28÷14 AWG	1,5 mm2 28÷14 AWG	
-40°C + 105°C	-40°C + 105°C	-40°C + 105°C
	0,5Nm (4,5 Lb in)	0,5Nm (4,5 Lb in)
7 mm	7 mm	
c UL us 10A-300V	c UL us 10A-300V	c UL us 10A-300V
OG(orange)	OG (orange)	LGY (light grey)

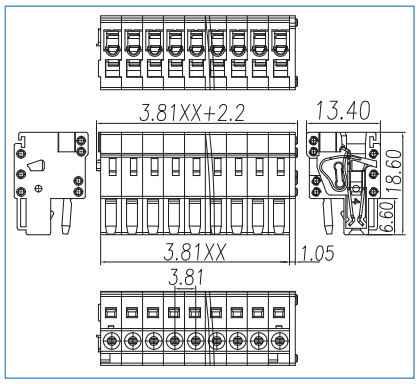

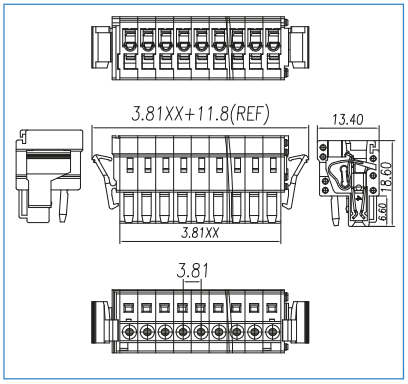

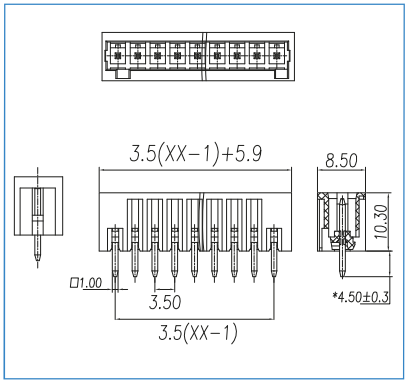

CFP102-3.81	CFP102-3.81-EJ	CMP102-3.5-CV
CFP103-3.81	CFP103-3.81-EJ	CMP103-3.5-CV
CFP104-3.81	CFP104-3.81-EJ	CMP104-3.5-CV
CFP105-3.81	CFP105-3.81-EJ	CMP105-3.5-CV
CFP106-3.81	CFP106-3.81-EJ	CMP106-3.5-CV
CFP107-3.81	CFP107-3.81-EJ	CMP107-3.5-CV
CFP108-3.81	CFP108-3.81-EJ	CMP108-3.5-CV
CFP109-3.81	CFP109-3.81-EJ	CMP109-3.5-CV
CFP110-3.81	CFP110-3.81-EJ	CMP110-3.5-CV
CFP111-3.81	CFP111-3.81-EJ	CMP111-3.5-CV
CFP112-3.81	CFP112-3.81-EJ	CMP112-3.5-CV
CFP113-3.81	CFP113-3.81-EJ	CMP113-3.5-CV
CFP114-3.81	CFP114-3.81-EJ	CMP114-3.5-CV
CFP115-3.81	CFP115-3.81-EJ	CMP115-3.5-CV
CFP116-3.81	CFP116-3.81-EJ	CMP116-3.5-CV
CFP117-3.81	CFP117-3.81-EJ	CMP117-3.5-CV
CFP118-3.81	CFP118-3.81-EJ	CMP118-3.5-CV
CFP119-3.81	CFP119-3.81-EJ	CMP119-3.5-CV
CFP120-3.81	CFP120-3.81-EJ	CMP120-3.5-CV
CFP121-3.81	CFP121-3.81-EJ	CMP121-3.5-CV
CFP122-3.81	CFP122-3.81-EJ	CMP122-3.5-CV
CFP123-3.81	CFP123-3.81-EJ	CMP123-3.5-CV
CFP124-3.81	CFP124-3.81-EJ	CMP124-3.5-CV

euro-block

SERIE/PRODUCT SERIES	CMP1-3.5-CH	CMP1-3.81-CV
Passo / Pitch(mm)/ Rastermaß	3,5 mm	3,81 mm
Poli monoblocco/single mold poles/Polzahl	2÷24	2÷24
Vite / Screw / Schraube		
Corpo isolante / Housing / Gehäuse	PA66, UL 94V0	PA66, UL 94V0
Tensione nominale/Rated Voltage/Nennspannung	130V	130V
Corrente Nominale/Rated Current/Nennstrom	10A	10A
Sezione Nominale/Wire section /Nennquerschnitt		
Temperatura /Temperature /Temperatur	-40°C + 105°C	-40°C + 105°C
Coppia di torsione /Torque /Anzugsdrehmoment		
Lunghezza spellatura/Stripping lenght/Abisolierlänge		
VDE		
UL - cUL (file n.E34235)	10A-300V	10A-300V
*Colore standard/ Standard colour/ Standardfarbe	LGY (light grey)	OG (orange)
Colori a richiesta/Colours on request/Farben auf Anfrage		

*= da non specificare sul codice di ordinazione
Do not specify on ordering code
Muss im Bestellcode nicht angegeben werden

Per evitare sbalzi tra i morsetti ed i fori sul c.s. bisogna prevedere una interruzione quando il n. di poli è superiore a 30.

To avoid loss of pitch between terminal block and pcb it is necessary to interrupt the terminal row by poles higher than 30

Die Polzahl sollte maximal 30 betragen damit das Rastermaß von PCB und Leiterplattenklemme noch übereinstimmen

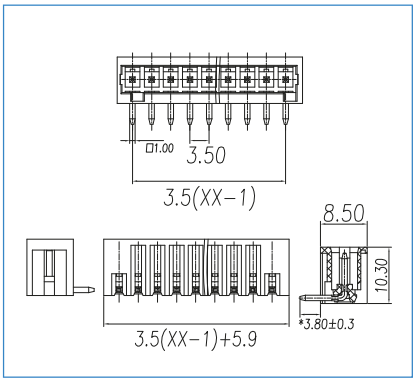

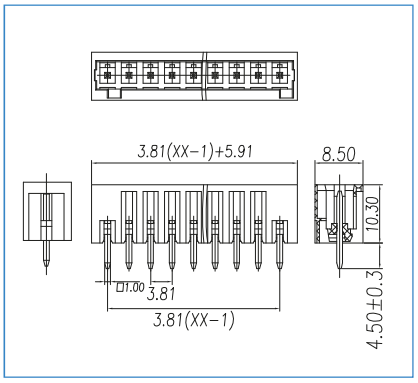

COME ORDINARE
HOW TO ORDER / BESTELLNUMMER

Series	n. poles	pitch	version	color	custom

PASSO / PITCH / RASTERMAß

2 POLI	CMP102-3.5-CH	CMP102-3.81-CV
3 POLI	CMP103-3.5-CH	CMP103-3.81-CV
	CMP104-3.5-CH	CMP104-3.81-CV
	CMP105-3.5-CH	CMP105-3.81-CV
	CMP106-3.5-CH	CMP106-3.81-CV
	CMP107-3.5-CH	CMP107-3.81-CV
	CMP108-3.5-CH	CMP108-3.81-CV
	CMP109-3.5-CH	CMP109-3.81-CV
	CMP110-3.5-CH	CMP110-3.81-CV
	CMP111-3.5-CH	CMP111-3.81-CV
	CMP112-3.5-CH	CMP112-3.81-CV
	CMP113-3.5-CH	CMP113-3.81-CV
	CMP114-3.5-CH	CMP114-3.81-CV
	CMP115-3.5-CH	CMP115-3.81-CV
	CMP116-3.5-CH	CMP116-3.81-CV
	CMP117-3.5-CH	CMP117-3.81-CV
	CMP118-3.5-CH	CMP118-3.81-CV
	CMP119-3.5-CH	CMP119-3.81-CV
	CMP120-3.5-CH	CMP120-3.81-CV
	CMP121-3.5-CH	CMP121-3.81-CV
	CMP122-3.5-CH	CMP122-3.81-CV
	CMP123-3.5-CH	CMP123-3.81-CV
24 POLI	CMP124-3.5-CH	CMP124-3.81-CV

CMP1-3.81-CH

3,81 mm
2÷24
PA66, UL 94V0
130V
10A
-40°C + 105°C
10A-300V
OG (orange)

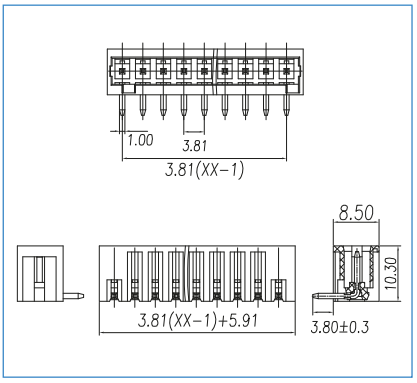

CFP1-5

5 mm
2÷24
PA66, UL 94V0
250V
16A
2,5 mm2 28÷12 AWG
-40°C + 105°C
0,5Nm (4,5 Lb in)
8 mm
15A-300V
GY (grey)

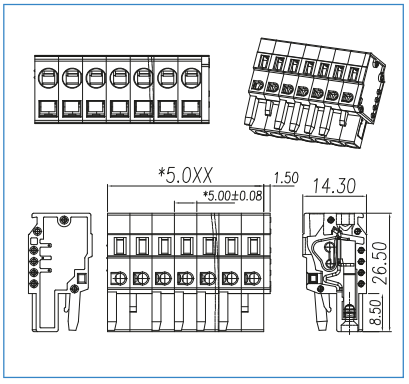

CFP1-5-S

5 mm
2÷24
PA66, UL 94V0
250V
16A
2,5 mm2 28÷12 AWG
-40°C + 105°C
0,5Nm (4,5 Lb in)
8 mm
15A-300V
LGY (light grey)

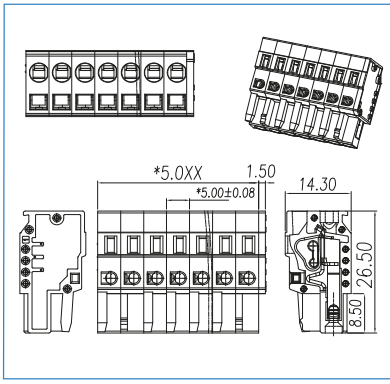

CMP102-3.81-CH	CFP102-5	CFP102-5-S
CMP103-3.81-CH	CFP103-5	CFP103-5-S
CMP104-3.81-CH	CFP104-5	CFP104-5-S
CMP105-3.81-CH	CFP105-5	CFP105-5-S
CMP106-3.81-CH	CFP106-5	CFP106-5-S
CMP107-3.81-CH	CFP107-5	CFP107-5-S
CMP108-3.81-CH	CFP108-5	CFP108-5-S
CMP109-3.81-CH	CFP109-5	CFP109-5-S
CMP110-3.81-CH	CFP110-5	CFP110-5-S
CMP111-3.81-CH	CFP111-5	CFP111-5-S
CMP112-3.81-CH	CFP112-5	CFP112-5-S
CMP113-3.81-CH	CFP113-5	CFP113-5-S
CMP114-3.81-CH	CFP114-5	CFP114-5-S
CMP115-3.81-CH	CFP115-5	CFP115-5-S
CMP116-3.81-CH	CFP116-5	CFP116-5-S
CMP117-3.81-CH	CFP117-5	CFP117-5-S
CMP118-3.81-CH	CFP118-5	CFP118-5-S
CMP119-3.81-CH	CFP119-5	CFP119-5-S
CMP120-3.81-CH	CFP120-5	CFP120-5-S
CMP121-3.81-CH	CFP121-5	CFP121-5-S
CMP122-3.81-CH	CFP122-5	CFP122-5-S
CMP123-3.81-CH	CFP123-5	CFP123-5-S
CMP124-3.81-CH	CFP124-5	CFP124-5-S

euro-block

SERIE/PRODUCT SERIES	CFP1-5-P	CFP1-5-SP
Passo / Pitch(mm)/ Rastermaß	5 mm	5 mm
Poli monoblocco/single mold poles/Polzahl	2÷24	2÷24
Vite / Screw / Schraube		
Corpo isolante / Housing / Gehäuse	PA66, UL 94V0	PA66, UL 94V0
Tensione nominale/Rated Voltage/Nennspannung	250V	250V
Corrente Nominale/Rated Current/Nennstrom	16A	16A
Sezione Nominale/Wire section /Nennquerschnitt	2,5 mm2 28÷12AWG	2,5 mm2 28÷12AWG
Temperatura /Temperature /Temperatur	-40°C + 105°C	-40°C + 105°C
Coppia di torsione /Torque /Anzugsdrehmoment		
Lunghezza spellatura/Stripping lenght/Abisolierlänge	8 mm	8 mm
VDE		
UL - cUL (file n.E34235)	15A-300V	15A-300V
*Colore standard/ Standard colour/ Standardfarbe	GY (grey)	LGY (light grey)
Colori a richiesta/Colours on request/Farben auf Anfrage		

*= da non specificare sul codice di ordinazione
Do not specify on ordering code
Muss im Bestellcode nicht angegeben werden

Per evitare sbalzi tra i morsetti ed i fori sul c.s. bisogna prevedere una interruzione quando il n. di poli è superiore a 30.

To avoid loss of pitch between terminal block and pcb it is necessary to interrupt the terminal row by poles higher than 30

Die Polzahl sollte maximal 30 betragen damit das Rastermaß von PCB und Leiterplattenklemme noch übereinstimmen

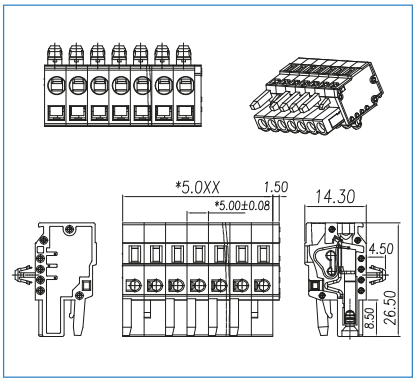

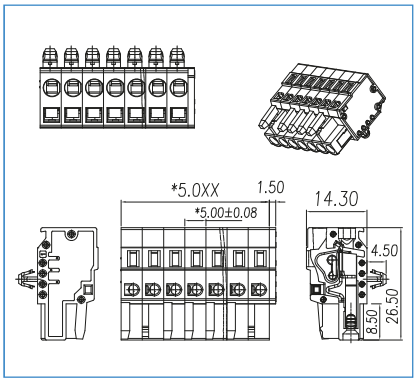

COME ORDINARE
HOW TO ORDER / BESTELLNUMMER

Series	n. poles	pitch	version	color	custom

PASSO / PITCH / RASTERMAß

2 POLI	CFP102-5-P	CFP102-5-SP
3 POLI	CFP103-5-P	CFP103-5-SP
	CFP104-5-P	CFP104-5-SP
	CFP105-5-P	CFP105-5-SP
	CFP106-5-P	CFP106-5-SP
	CFP107-5-P	CFP107-5-SP
	CFP108-5-P	CFP108-5-SP
	CFP109-5-P	CFP109-5-SP
	CFP110-5-P	CFP110-5-SP
	CFP111-5-P	CFP111-5-SP
	CFP112-5-P	CFP112-5-SP
	CFP113-5-P	CFP113-5-SP
	CFP114-5-P	CFP114-5-SP
	CFP115-5-P	CFP115-5-SP
	CFP116-5-P	CFP116-5-SP
	CFP117-5-P	CFP117-5-SP
	CFP118-5-P	CFP118-5-SP
	CFP119-5-P	CFP119-5-SP
	CFP120-5-P	CFP120-5-SP
	CFP121-5-P	CFP121-5-SP
	CFP122-5-P	CFP122-5-SP
	CFP123-5-P	CFP123-5-SP
24 POLI	CFP124-5-P	CFP124-5-SP

CFP1-5-EJ

5 mm
2÷24
PA66, UL 94V0
250V
16A
2,5 mm2 28÷12 AWG
-40°C + 105°C
8 mm
15A-300V
GY (grey)

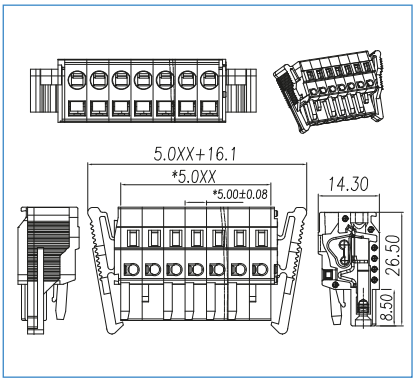

CFP102-5-EJ
CFP103-5-EJ
CFP104-5-EJ
CFP105-5-EJ
CFP106-5-EJ
CFP107-5-EJ
CFP108-5-EJ
CFP109-5-EJ
CFP110-5-EJ
CFP111-5-EJ
CFP112-5-EJ
CFP113-5-EJ
CFP114-5-EJ
CFP115-5-EJ
CFP116-5-EJ
CFP117-5-EJ
CFP118-5-EJ
CFP119-5-EJ
CFP120-5-EJ
CFP121-5-EJ
CFP122-5-EJ
CFP123-5-EJ
CFP124-5-EJ

CFP1-5-SEJ

5 mm
2÷24
PA66, UL 94V0
250V
16A
2,5 mm2 28÷12 AWG
-40°C + 105°C
8 mm
15A-300V
LGY (light grey)

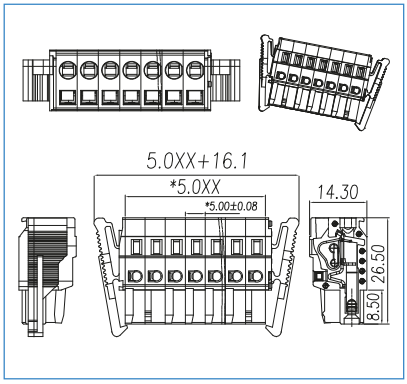

CFP102-5-SEJ
CFP103-5-SEJ
CFP104-5-SEJ
CFP105-5-SEJ
CFP106-5-SEJ
CFP107-5-SEJ
CFP108-5-SEJ
CFP109-5-SEJ
CFP110-5-SEJ
CFP111-5-SEJ
CFP112-5-SEJ
CFP113-5-SEJ
CFP114-5-SEJ
CFP115-5-SEJ
CFP116-5-SEJ
CFP117-5-SEJ
CFP118-5-SEJ
CFP119-5-SEJ
CFP120-5-SEJ
CFP121-5-SEJ
CFP122-5-SEJ
CFP123-5-SEJ
CFP124-5-SEJ

CFP1-5-F

5 mm
2÷24
PA66, UL 94V0
250V
16A
2,5 mm2 28÷12 AWG
-40°C + 105°C
8 mm
15A-300V
GY (grey)

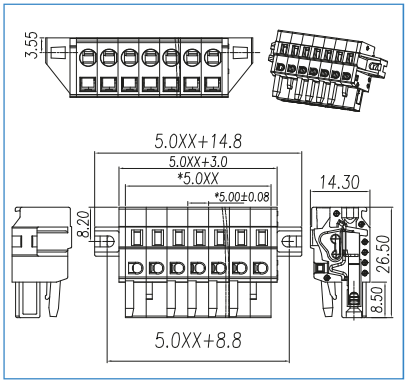

CFP102-5-F
CFP103-5-F
CFP104-5-F
CFP105-5-F
CFP106-5-F
CFP107-5-F
CFP108-5-F
CFP109-5-F
CFP110-5-F
CFP111-5-F
CFP112-5-F
CFP113-5-F
CFP114-5-F
CFP115-5-F
CFP116-5-F
CFP117-5-F
CFP118-5-F
CFP119-5-F
CFP120-5-F
CFP121-5-F
CFP122-5-F
CFP123-5-F
CFP124-5-F

euro-block

SERIE/PRODUCT SERIES	CFP1-5-SF	CFP1-5.08
Passo / Pitch(mm)/ Rastermaß	5 mm	5,08 mm
Poli monoblocco/single mold poles/Polzahl	2÷24	2÷24
Vite / Screw / Schraube		
Corpo isolante / Housing / Gehäuse	PA66, UL 94V0	PA66, UL 94V0
Tensione nominale/Rated Voltage/Nennspannung	250V	250V
Corrente Nominale/Rated Current/Nennstrom	16A	16A
Sezione Nominale/Wire section /Nennquerschnitt	2,5 mm2 28÷12 AWG	2,5 mm2 28÷12 AWG
Temperatura /Temperature /Temperatur	-40°C + 105°C	-40°C + 105°C
Coppia di torsione /Torque /Anzugsdrehmoment		
Lunghezza spellatura/Stripping lenght/Abisolierlänge	8 mm	8 mm
VDE		
UL - cUL (file n.E34235)	15A-300V	15A-300V
*Colore standard/ Standard colour/ Standardfarbe	LGY (light grey)	OG (orange)
Colori a richiesta/Colours on request/Farben auf Anfrage		

*= da non specificare sul codice di ordinazione
Do not specify on ordering code
Muss im Bestellcode nicht angegeben werden

Per evitare sbalzi tra i morsetti ed i fori sul c.s. bisogna prevedere una interruzione quando il n. di poli è superiore a 30.

To avoid loss of pitch between terminal block and pcb it is necessary to interrupt the terminal row by poles higher than 30

Die Polzahl sollte maximal 30 betragen damit das Rastermaß von PCB und Leiterplattenklemme noch übereinstimmen

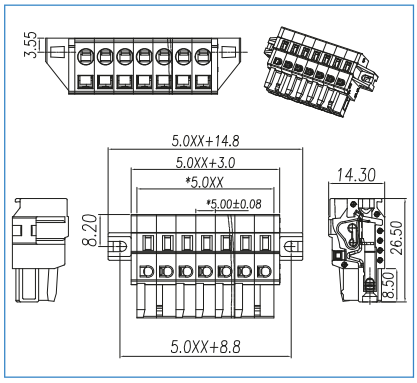

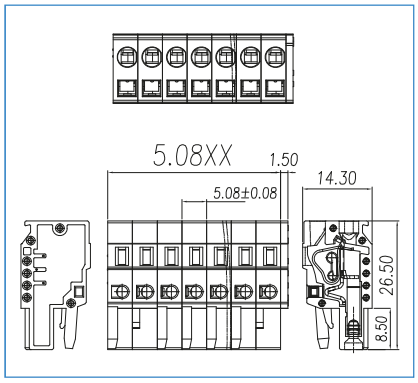

COME ORDINARE
HOW TO ORDER / BESTELLNUMMER

Series	n. poles	pitch	version	color	custom

PASSO / PITCH / RASTERMAß

2 POLI	CFP102-5-SF	CFP102-5.08
3 POLI	CFP103-5-SF	CFP103-5.08
	CFP104-5-SF	CFP104-5.08
	CFP105-5-SF	CFP105-5.08
	CFP106-5-SF	CFP106-5.08
	CFP107-5-SF	CFP107-5.08
	CFP108-5-SF	CFP108-5.08
	CFP109-5-SF	CFP109-5.08
	CFP110-5-SF	CFP110-5.08
	CFP111-5-SF	CFP111-5.08
	CFP112-5-SF	CFP112-5.08
	CFP113-5-SF	CFP113-5.08
	CFP114-5-SF	CFP114-5.08
	CFP115-5-SF	CFP115-5.08
	CFP116-5-SF	CFP116-5.08
	CFP117-5-SF	CFP117-5.08
	CFP118-5-SF	CFP118-5.08
	CFP119-5-SF	CFP119-5.08
	CFP120-5-SF	CFP120-5.08
	CFP121-5-SF	CFP121-5.08
	CFP122-5-SF	CFP122-5.08
	CFP123-5-SF	CFP123-5.08
24 POLI	CFP124-5-SF	CFP124-5.08

CFP1-5.08-S

5,08 mm
2÷24
PA66, UL 94V0
250V
16A
2,5 mm2 28÷12 AWG
-40°C + 105°C
8 mm
15A-300V
OG (orange)

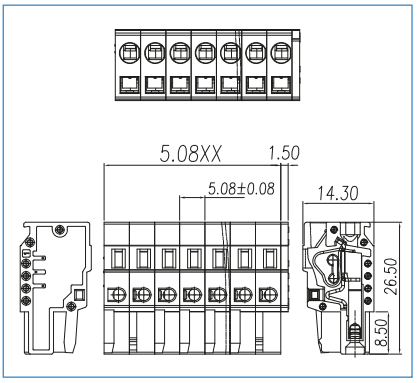

CFP1-5.08-P

5,08 mm
2÷24
PA66, UL 94V0
250V
16A
2,5 mm2 28÷12 AWG
-40°C + 105°C
8 mm
15A-300V
OG (orange)

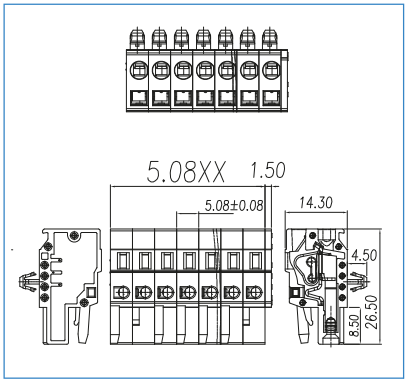

CFP1-5.08-SP

5,08 mm
2÷24
PA66, UL 94V0
250V
16A
2,5 mm2 28÷12 AWG
-40°C + 105°C
8 mm
15A-300V
OG (orange)

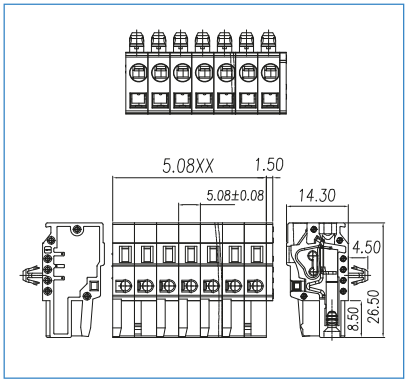

CFP102-5.08-S	CFP102-5.08-P	CFP102-5.08-SP
CFP103-5.08-S	CFP103-5.08-P	CFP103-5.08-SP
CFP104-5.08-S	CFP104-5.08-P	CFP104-5.08-SP
CFP105-5.08-S	CFP105-5.08-P	CFP105-5.08-SP
CFP106-5.08-S	CFP106-5.08-P	CFP106-5.08-SP
CFP107-5.08-S	CFP107-5.08-P	CFP107-5.08-SP
CFP108-5.08-S	CFP108-5.08-P	CFP108-5.08-SP
CFP109-5.08-S	CFP109-5.08-P	CFP109-5.08-SP
CFP110-5.08-S	CFP110-5.08-P	CFP110-5.08-SP
CFP111-5.08-S	CFP111-5.08-P	CFP111-5.08-SP
CFP112-5.08-S	CFP112-5.08-P	CFP112-5.08-SP
CFP113-5.08-S	CFP113-5.08-P	CFP113-5.08-SP
CFP114-5.08-S	CFP114-5.08-P	CFP114-5.08-SP
CFP115-5.08-S	CFP115-5.08-P	CFP115-5.08-SP
CFP116-5.08-S	CFP116-5.08-P	CFP116-5.08-SP
CFP117-5.08-S	CFP117-5.08-P	CFP117-5.08-SP
CFP118-5.08-S	CFP118-5.08-P	CFP118-5.08-SP
CFP119-5.08-S	CFP119-5.08-P	CFP119-5.08-SP
CFP120-5.08-S	CFP120-5.08-P	CFP120-5.08-SP
CFP121-5.08-S	CFP121-5.08-P	CFP121-5.08-SP
CFP122-5.08-S	CFP122-5.08-P	CFP122-5.08-SP
CFP123-5.08-S	CFP123-5.08-P	CFP123-5.08-SP
CFP124-5.08-S	CFP124-5.08-P	CFP124-5.08-SP

euro-block

SERIE/PRODUCT SERIES	CFP1-5.08-EJ	CFP1-5.08-SEJ
Passo / Pitch(mm)/ Rastermaß	5,08 mm	5,08 mm
Poli monoblocco/single mold poles/Polzahl	2÷24	2÷24
Vite / Screw / Schraube		
Corpo isolante / Housing / Gehäuse	PA66, UL 94V0	PA66, UL 94V0
Tensione nominale/Rated Voltage/Nennspannung	250V	250V
Corrente Nominale/Rated Current/Nennstrom	16A	16A
Sezione Nominale/Wire section /Nennquerschnitt	2,5 mm2 28÷12 AWG	2,5 mm2 28÷12 AWG
Temperatura /Temperature /Temperatur	-40°C + 105°C	-40°C + 105°C
Coppia di torsione /Torque /Anzugsdrehmoment		
Lunghezza spellatura/Stripping lenght/Abisolierlänge	8 mm	8 mm
VDE		
UL - cUL (file n.E342315)	15A-300V	15A-300V
*Colore standard/ Standard colour/ Standardfarbe	OG (orange)	OG (orange)
Colori a richiesta/Colours on request/Farben auf Anfrage		

*= da non specificare sul codice di ordinazione
Do not specify on ordering code
Muss im Bestellcode nicht angegeben werden

Per evitare sbalzi tra i morsetti ed i fori sul c.s. bisogna prevedere una interruzione quando il n. di poli è superiore a 30.

To avoid loss of pitch between terminal block and pcb it is necessary to interrupt the terminal row by poles higher than 30

Die Polzahl sollte maximal 30 betragen damit das Rastermaß von PCB und Leiterplattenklemme noch übereinstimmen

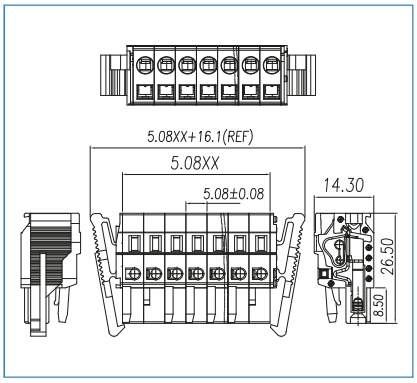

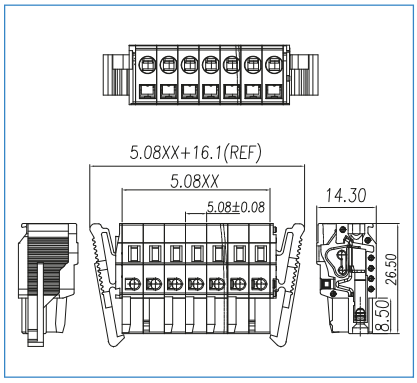

COME ORDINARE
HOW TO ORDER / BESTELLNUMMER

Series	n. poles	pitch	version	color	custom

PASSO / PITCH / RASTERMAß

2 POLI	CFP102-5.08-EJ	CFP102-5.08-SEJ
3 POLI	CFP103-5.08-EJ	CFP103-5.08-SEJ
	CFP104-5.08-EJ	CFP104-5.08-SEJ
	CFP105-5.08-EJ	CFP105-5.08-SEJ
	CFP106-5.08-EJ	CFP106-5.08-SEJ
	CFP107-5.08-EJ	CFP107-5.08-SEJ
	CFP108-5.08-EJ	CFP108-5.08-SEJ
	CFP109-5.08-EJ	CFP109-5.08-SEJ
	CFP110-5.08-EJ	CFP110-5.08-SEJ
	CFP111-5.08-EJ	CFP111-5.08-SEJ
	CFP112-5.08-EJ	CFP112-5.08-SEJ
	CFP113-5.08-EJ	CFP113-5.08-SEJ
	CFP114-5.08-EJ	CFP114-5.08-SEJ
	CFP115-5.08-EJ	CFP115-5.08-SEJ
	CFP116-5.08-EJ	CFP116-5.08-SEJ
	CFP117-5.08-EJ	CFP117-5.08-SEJ
	CFP118-5.08-EJ	CFP118-5.08-SEJ
	CFP119-5.08-EJ	CFP119-5.08-SEJ
	CFP120-5.08-EJ	CFP120-5.08-SEJ
	CFP121-5.08-EJ	CFP121-5.08-SEJ
	CFP122-5.08-EJ	CFP122-5.08-SEJ
	CFP123-5.08-EJ	CFP123-5.08-SEJ
24 POLI	CFP124-5.08-EJ	CFP124-5.08-SEJ

CFP1-5.08-F

5,08 mm
2÷24
PA66, UL 94V0
250V
16A
2,5 mm2 28÷12 AWG
-40°C + 105°C
8 mm
15A-300V
OG (orange)

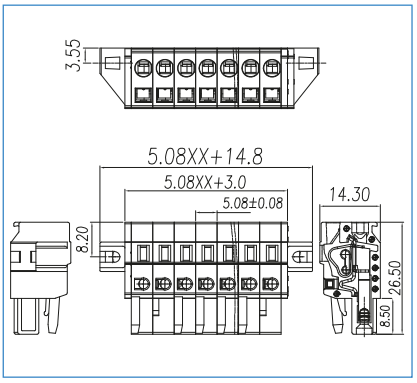

CFP1-5.08-SF

5,08 mm
2÷24
PA66, UL 94V0
250V
16A
2,5 mm2 28÷12 AWG
-40°C + 105°C
8 mm
15A-300V
OG (orange)

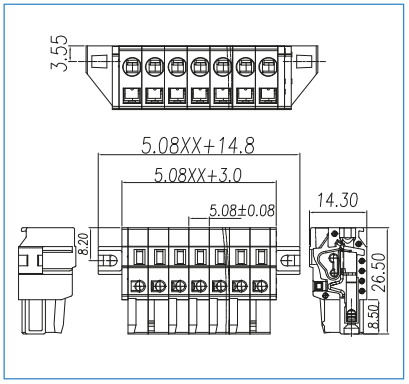

CFP2-7.5

7,5 mm
2÷24
PA66, UL 94V0
250V
16A
2,5 mm2 28÷12 AWG
-40°C + 105°C
8 mm
15A-300V
GY (grey)

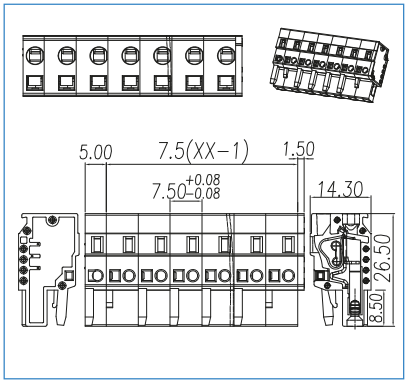

CFP102-5.08-F	CFP102-5.08-SF	CFP202-7.5
CFP103-5.08-F	CFP103-5.08-SF	CFP203-7.5
CFP104-5.08-F	CFP104-5.08-SF	CFP204-7.5
CFP105-5.08-F	CFP105-5.08-SF	CFP205-7.5
CFP106-5.08-F	CFP106-5.08-SF	CFP206-7.5
CFP107-5.08-F	CFP107-5.08-SF	CFP207-7.5
CFP108-5.08-F	CFP108-5.08-SF	CFP208-7.5
CFP109-5.08-F	CFP109-5.08-SF	CFP209-7.5
CFP110-5.08-F	CFP110-5.08-SF	CFP210-7.5
CFP111-5.08-F	CFP111-5.08-SF	CFP211-7.5
CFP112-5.08-F	CFP112-5.08-SF	CFP212-7.5
CFP113-5.08-F	CFP113-5.08-SF	CFP213-7.5
CFP114-5.08-F	CFP114-5.08-SF	CFP214-7.5
CFP115-5.08-F	CFP115-5.08-SF	CFP215-7.5
CFP116-5.08-F	CFP116-5.08-SF	CFP216-7.5
CFP117-5.08-F	CFP117-5.08-SF	CFP217-7.5
CFP118-5.08-F	CFP118-5.08-SF	CFP218-7.5
CFP119-5.08-F	CFP119-5.08-SF	CFP219-7.5
CFP120-5.08-F	CFP120-5.08-SF	CFP220-7.5
CFP121-5.08-F	CFP121-5.08-SF	CFP221-7.5
CFP122-5.08-F	CFP122-5.08-SF	CFP222-7.5
CFP123-5.08-F	CFP123-5.08-SF	CFP223-7.5
CFP124-5.08-F	CFP124-5.08-SF	CFP224-7.5

euro-block

SERIE/PRODUCT SERIES	CFP2-7.5-S	CFP2-7.5-P
Passo / Pitch(mm)/ Rastermaß	7,5 mm	7,5 mm
Poli monoblocco/single mold poles/Polzahl	2÷24	2÷24
Vite / Screw / Schraube		
Corpo isolante / Housing / Gehäuse	PA66, UL 94V0	PA66, UL 94V0
Tensione nominale/Rated Voltage/Nennspannung	250V	250V
Corrente Nominale/Rated Current/Nennstrom	16A	16A
Sezione Nominale/Wire section /Nennquerschnitt	2,5 mm2 28÷12 AWG	2,5 mm2 28÷12 AWG
Temperatura /Temperature /Temperatur	-40°C + 105°C	-40°C + 105°C
Coppia di torsione /Torque /Anzugsdrehmoment		
Lunghezza spellatura/Stripping lenght/Abisolierlänge	8 mm	8 mm
VDE		
UL - cUL (file n.E34235)	15A-300V	15A-300V
*Colore standard/ Standard colour/ Standardfarbe	LGY (light grey)	GY (grey)
Colori a richiesta/Colours on request/Farben auf Anfrage		

*= da non specificare sul codice di ordinazione
Do not specify on ordering code
Muss im Bestellcode nicht angegeben werden

Per evitare sbalzi tra i morsetti ed i fori sul c.s. bisogna prevedere una interruzione quando il n. di poli è superiore a 30.

To avoid loss of pitch between terminal block and pcb it is necessary to interrupt the terminal row by poles higher than 30

Die Polzahl sollte maximal 30 betragen damit das Rastermaß von PCB und Leiterplattenklemme noch übereinstimmen

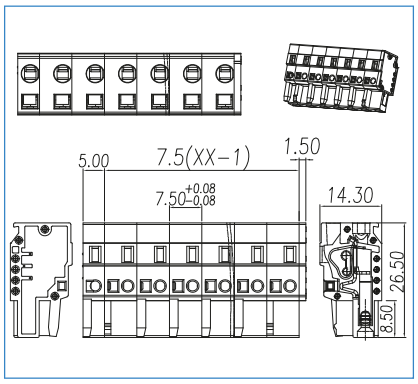

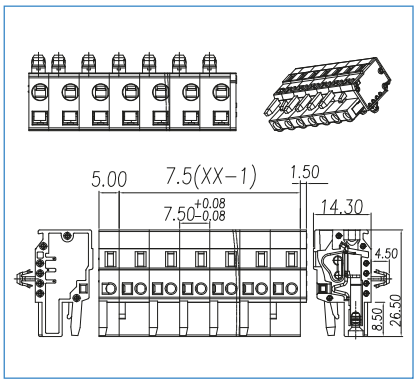

COME ORDINARE
HOW TO ORDER / BESTELLNUMMER

Series	n. poles	pitch	version	color	custom

PASSO / PITCH / RASTERMAß

2 POLI	CFP202-7.5-S	CFP202-7.5-P
3 POLI	CFP203-7.5-S	CFP203-7.5-P
	CFP204-7.5-S	CFP204-7.5-P
	CFP205-7.5-S	CFP205-7.5-P
	CFP206-7.5-S	CFP206-7.5-P
	CFP207-7.5-S	CFP207-7.5-P
	CFP208-7.5-S	CFP208-7.5-P
	CFP209-7.5-S	CFP209-7.5-P
	CFP210-7.5-S	CFP210-7.5-P
	CFP211-7.5-S	CFP211-7.5-P
	CFP212-7.5-S	CFP212-7.5-P
	CFP213-7.5-S	CFP213-7.5-P
	CFP214-7.5-S	CFP214-7.5-P
	CFP215-7.5-S	CFP215-7.5-P
	CFP216-7.5-S	CFP216-7.5-P
	CFP217-7.5-S	CFP217-7.5-P
	CFP218-7.5-S	CFP218-7.5-P
	CFP219-7.5-S	CFP219-7.5-P
	CFP220-7.5-S	CFP220-7.5-P
	CFP221-7.5-S	CFP221-7.5-P
	CFP222-7.5-S	CFP222-7.5-P
	CFP223-7.5-S	CFP223-7.5-P
24 POLI	CFP224-7.5-S	CFP224-7.5-P

CFP2-7.5-SP	CFP2-7.5-EJ	CFP2-7.5-SEJ
7,5 mm	7,5 mm	7,5 mm
2÷24	2÷24	2÷24
PA66, UL 94V0	PA66, UL 94V0	PA66, UL 94V0
250V	250V	250V
16A	16A	16A
2,5 mm2 28÷12 AWG	2,5 mm2 28÷12 AWG	2,5 mm2 28÷12 AWG
-40°C + 105°C	-40°C + 105°C	-40°C + 105°C
8 mm	8 mm	8 mm
15A-300V	15A-300V	15A-300V
LGY (light grey)	GY (grey)	LGY (light grey)

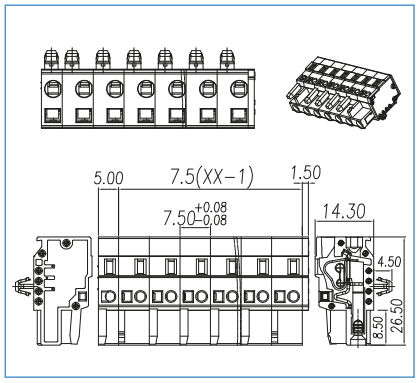

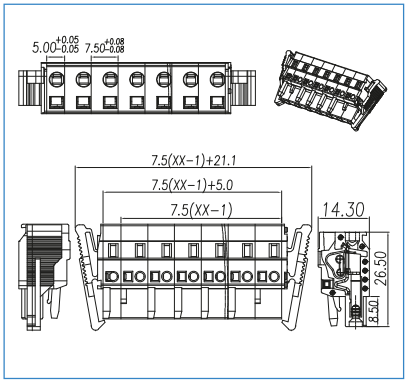

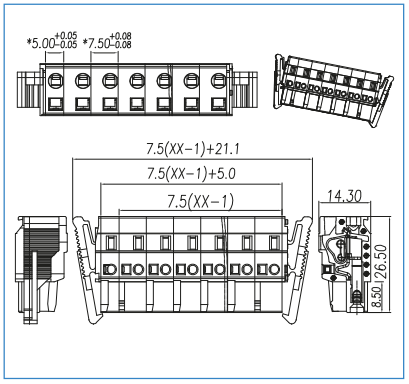

CFP202-7.5-SP	CFP202-7.5-EJ	CFP202-7.5-SEJ
CFP203-7.5-SP	CFP203-7.5-EJ	CFP203-7.5-SEJ
CFP204-7.5-SP	CFP204-7.5-EJ	CFP204-7.5-SEJ
CFP205-7.5-SP	CFP205-7.5-EJ	CFP205-7.5-SEJ
CFP206-7.5-SP	CFP206-7.5-EJ	CFP206-7.5-SEJ
CFP207-7.5-SP	CFP207-7.5-EJ	CFP207-7.5-SEJ
CFP208-7.5-SP	CFP208-7.5-EJ	CFP208-7.5-SEJ
CFP209-7.5-SP	CFP209-7.5-EJ	CFP209-7.5-SEJ
CFP210-7.5-SP	CFP210-7.5-EJ	CFP210-7.5-SEJ
CFP211-7.5-SP	CFP211-7.5-EJ	CFP211-7.5-SEJ
CFP212-7.5-SP	CFP212-7.5-EJ	CFP212-7.5-SEJ
CFP213-7.5-SP	CFP213-7.5-EJ	CFP213-7.5-SEJ
CFP214-7.5-SP	CFP214-7.5-EJ	CFP214-7.5-SEJ
CFP215-7.5-SP	CFP215-7.5-EJ	CFP215-7.5-SEJ
CFP216-7.5-SP	CFP216-7.5-EJ	CFP216-7.5-SEJ
CFP217-7.5-SP	CFP217-7.5-EJ	CFP217-7.5-SEJ
CFP218-7.5-SP	CFP218-7.5-EJ	CFP218-7.5-SEJ
CFP219-7.5-SP	CFP219-7.5-EJ	CFP219-7.5-SEJ
CFP220-7.5-SP	CFP220-7.5-EJ	CFP220-7.5-SEJ
CFP221-7.5-SP	CFP221-7.5-EJ	CFP221-7.5-SEJ
CFP222-7.5-SP	CFP222-7.5-EJ	CFP222-7.5-SEJ
CFP223-7.5-SP	CFP223-7.5-EJ	CFP223-7.5-SEJ
CFP224-7.5-SP	CFP224-7.5-EJ	CFP224-7.5-SEJ

euro-block

SERIE/PRODUCT SERIES	CFP2-7.5-F	CFP2-7.5-SF
Passo / Pitch(mm)/ Rastermaß	7,5 mm	7,5 mm
Poli monoblocco/single mold poles/Polzahl	2÷24	2÷24
Vite / Screw / Schraube		
Corpo isolante / Housing / Gehäuse	PA66, UL 94V0	PA66, UL 94V0
Tensione nominale/Rated Voltage/Nennspannung	250V	250V
Corrente Nominale/Rated Current/Nennstrom	16A	16A
Sezione Nominale/Wire section /Nennquerschnitt	2,5 mm2 28÷12 AWG	2,5 mm2 28÷12 AWG
Temperatura /Temperature /Temperatur	-40°C + 105°C	-40°C + 105°C
Coppia di torsione /Torque /Anzugsdrehmoment		
Lunghezza spellatura/Stripping lenght/Abisolierlänge	8 mm	8 mm
VDE		
UL - cUL (file n.E342315)	15A-300V	15A-300V
*Colore standard/ Standard colour/ Standardfarbe	GY (grey)	LGY (light grey)
Colori a richiesta/Colours on request/Farben auf Anfrage		

*= da non specificare sul codice di ordinazione
Do not specify on ordering code
Muss im Bestellcode nicht angegeben werden

Per evitare sbalzi tra i morsetti ed i fori sul c.s. bisogna prevedere una interruzione quando il n. di poli è superiore a 30.

To avoid loss of pitch between terminal block and pcb it is necessary to interrupt the terminal row by poles higher than 30

Die Polzahl sollte maximal 30 betragen damit das Rastermaß von PCB und Leiterplattenklemme noch übereinstimmen

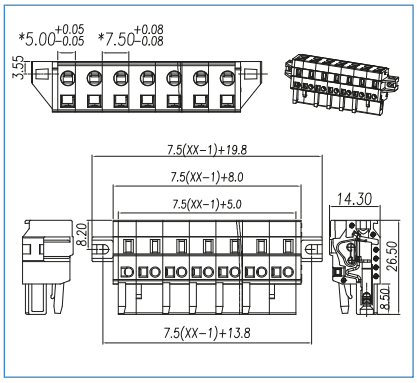

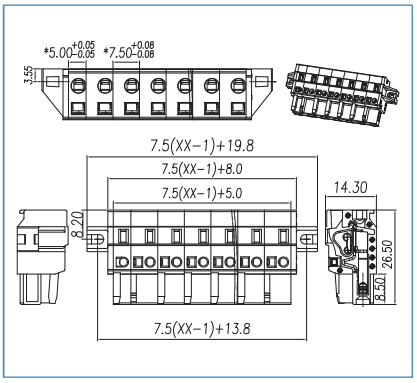

COME ORDINARE
HOW TO ORDER / BESTELLNUMMER

Series	n. poles	pitch	version	color	custom

PASSO / PITCH / RASTERMAß

2 POLI	CFP202-7.5-F	CFP202-7.5-SF
3 POLI	CFP203-7.5-F	CFP203-7.5-SF
	CFP204-7.5-F	CFP204-7.5-SF
	CFP205-7.5-F	CFP205-7.5-SF
	CFP206-7.5-F	CFP206-7.5-SF
	CFP207-7.5-F	CFP207-7.5-SF
	CFP208-7.5-F	CFP208-7.5-SF
	CFP209-7.5-F	CFP209-7.5-SF
	CFP210-7.5-F	CFP210-7.5-SF
	CFP211-7.5-F	CFP211-7.5-SF
	CFP212-7.5-F	CFP212-7.5-SF
	CFP213-7.5-F	CFP213-7.5-SF
	CFP214-7.5-F	CFP214-7.5-SF
	CFP215-7.5-F	CFP215-7.5-SF
	CFP216-7.5-F	CFP216-7.5-SF
	CFP217-7.5-F	CFP217-7.5-SF
	CFP218-7.5-F	CFP218-7.5-SF
	CFP219-7.5-F	CFP219-7.5-SF
	CFP220-7.5-F	CFP220-7.5-SF
	CFP221-7.5-F	CFP221-7.5-SF
	CFP222-7.5-F	CFP222-7.5-SF
	CFP223-7.5-F	CFP223-7.5-SF
24 POLI	CFP224-7.5-F	CFP224-7.5-SF

CFP2-7.62	CFP2-7.62-S	CFP2-7.62-P
7,62 mm	7,62 mm	7,62 mm
2÷24	2÷24	2÷24
PA66, UL 94V0	PA66, UL 94V0	PA66, UL 94V0
250V	250V	250V
16A	16A	16A
2,5 mm2 28÷12 AWG	2,5 mm2 28÷12 AWG	2,5 mm2 28÷12 AWG
-40°C + 105°C	-40°C + 105°C	-40°C + 105°C
8 mm	8 mm	8 mm
15A-300V	15A-300V	15A-300V
OG (orange)	OG (orange)	OG (orange)

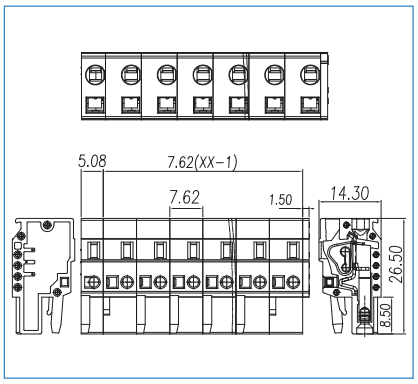

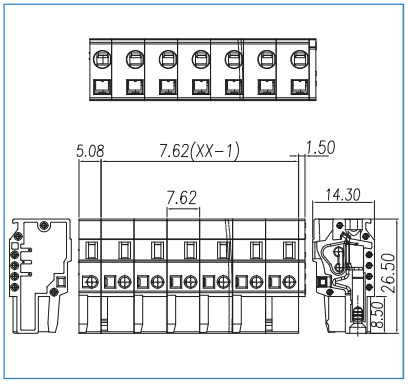

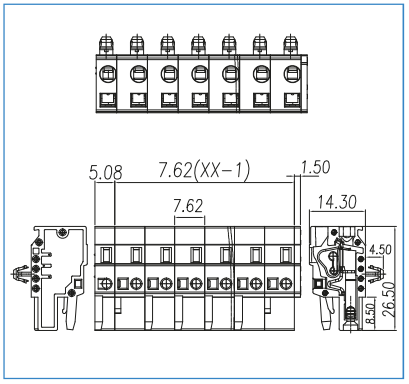

CFP202-7.62	CFP202-7.62-S	CFP202-7.62-P
CFP203-7.62	CFP203-7.62-S	CFP203-7.62-P
CFP204-7.62	CFP204-7.62-S	CFP204-7.62-P
CFP205-7.62	CFP205-7.62-S	CFP205-7.62-P
CFP206-7.62	CFP206-7.62-S	CFP206-7.62-P
CFP207-7.62	CFP207-7.62-S	CFP207-7.62-P
CFP208-7.62	CFP208-7.62-S	CFP208-7.62-P
CFP209-7.62	CFP209-7.62-S	CFP209-7.62-P
CFP210-7.62	CFP210-7.62-S	CFP210-7.62-P
CFP211-7.62	CFP211-7.62-S	CFP211-7.62-P
CFP212-7.62	CFP212-7.62-S	CFP212-7.62-P
CFP213-7.62	CFP213-7.62-S	CFP213-7.62-P
CFP214-7.62	CFP214-7.62-S	CFP214-7.62-P
CFP215-7.62	CFP215-7.62-S	CFP215-7.62-P
CFP216-7.62	CFP216-7.62-S	CFP216-7.62-P
CFP217-7.62	CFP217-7.62-S	CFP217-7.62-P
CFP218-7.62	CFP218-7.62-S	CFP218-7.62-P
CFP219-7.62	CFP219-7.62-S	CFP219-7.62-P
CFP220-7.62	CFP220-7.62-S	CFP220-7.62-P
CFP221-7.62	CFP221-7.62-S	CFP221-7.62-P
CFP222-7.62	CFP222-7.62-S	CFP222-7.62-P
CFP223-7.62	CFP223-7.62-S	CFP223-7.62-P
CFP224-7.62	CFP224-7.62-S	CFP224-7.62-P

euro-block

SERIE/PRODUCT SERIES	CFP2-7.62-SP	CFP2-7.62-EJ
Passo / Pitch(mm)/ Rastermaß	7,62 mm	7,62 mm
Poli monoblocco/single mold poles/Polzahl	2÷24	2÷24
Vite / Screw / Schraube		
Corpo isolante / Housing / Gehäuse	PA66, UL 94V0	PA66, UL 94V0
Tensione nominale/Rated Voltage/Nennspannung	250V	250V
Corrente Nominale/Rated Current/Nennstrom	16A	16A
Sezione Nominale/Wire section /Nenn querschnitt	2,5 mm2 28÷12 AWG	2,5 mm2 28÷12 AWG
Temperatura /Temperature /Temperatur	-40°C + 105°C	-40°C + 105°C
Coppia di torsione /Torque /Anzugsdrehmoment		
Lunghezza spellatura/Stripping lenght/Abisolierlänge	8 mm	8 mm
VDE		
UL - cUL (file n.E34235)	15A-300V	15A-300V
*Colore standard/ Standard colour/ Standardfarbe	OG (orange)	OG (orange)
Colori a richiesta/Colours on request/Farben auf Anfrage		

*= da non specificare sul codice di ordinazione
Do not specify on ordering code
Muss im Bestellcode nicht angegeben werden

Per evitare sbalzi tra i morsetti ed i fori sul c.s. bisogna prevedere una interruzione quando il n. di poli è superiore a 30.

To avoid loss of pitch between terminal block and pcb it is necessary to interrupt the terminal row by poles higher than 30

Die Polzahl sollte maximal 30 betragen damit das Rastermaß von PCB und Leiterplattenklemme noch übereinstimmen

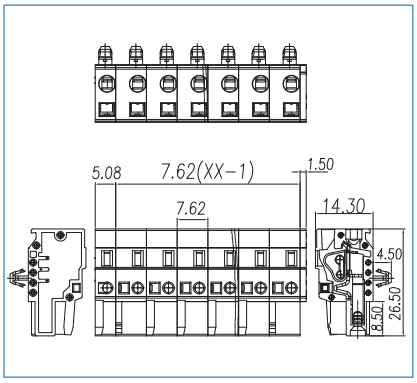

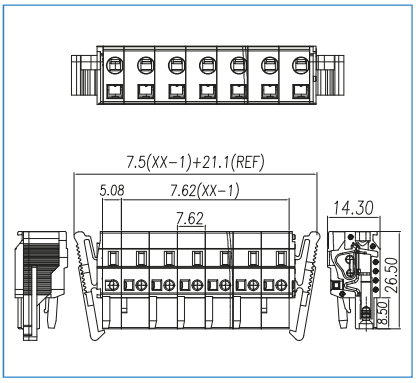

COME ORDINARE
HOW TO ORDER / BESTELLNUMMER

Series	n. poles	pitch	version	color	custom

PASSO / PITCH / RASTERMAß

2 POLI	CFP202-7.62-SP	CFP202-7.62-EJ
3 POLI	CFP203-7.62-SP	CFP203-7.62-EJ
	CFP204-7.62-SP	CFP204-7.62-EJ
	CFP205-7.62-SP	CFP205-7.62-EJ
	CFP206-7.62-SP	CFP206-7.62-EJ
	CFP207-7.62-SP	CFP207-7.62-EJ
	CFP208-7.62-SP	CFP208-7.62-EJ
	CFP209-7.62-SP	CFP209-7.62-EJ
	CFP210-7.62-SP	CFP210-7.62-EJ
	CFP211-7.62-SP	CFP211-7.62-EJ
	CFP212-7.62-SP	CFP212-7.62-EJ
	CFP213-7.62-SP	CFP213-7.62-EJ
	CFP214-7.62-SP	CFP214-7.62-EJ
	CFP215-7.62-SP	CFP215-7.62-EJ
	CFP216-7.62-SP	CFP216-7.62-EJ
	CFP217-7.62-SP	CFP217-7.62-EJ
	CFP218-7.62-SP	CFP218-7.62-EJ
	CFP219-7.62-SP	CFP219-7.62-EJ
	CFP220-7.62-SP	CFP220-7.62-EJ
	CFP221-7.62-SP	CFP221-7.62-EJ
	CFP222-7.62-SP	CFP222-7.62-EJ
	CFP223-7.62-SP	CFP223-7.62-EJ
24 POLI	CFP224-7.62-SP	CFP224-7.62-EJ

CFP2-7.62-SEJ

7,62 mm
2÷24
PA66, UL 94V0
250V
16A
2,5 mm2 28÷12 AWG
-40°C + 105°C
8 mm
15A-300V
OG (orange)

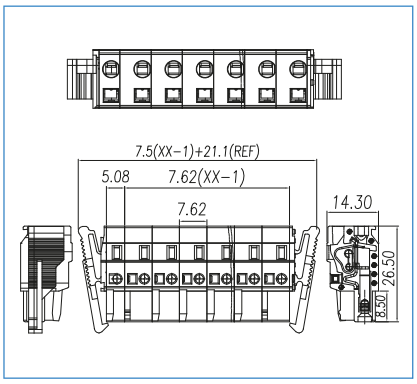

CFP2-7.62-F

7,62 mm
2÷24
PA66, UL 94V0
250V
16A
2,5 mm2 28÷12 AWG
-40°C + 105°C
8 mm
15A-300V
OG (orange)

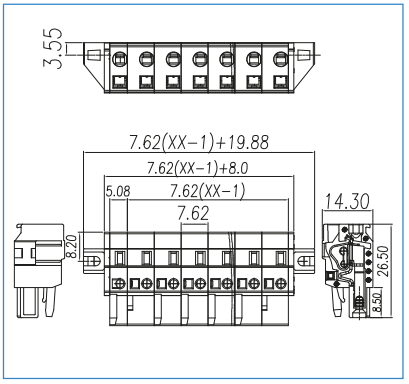

CFP2-7.62-SF

7,62 mm
2÷24
PA66, UL 94V0
250V
16A
2,5 mm2 28÷12 AWG
-40°C + 105°C
8 mm
15A-300V
OG (orange)

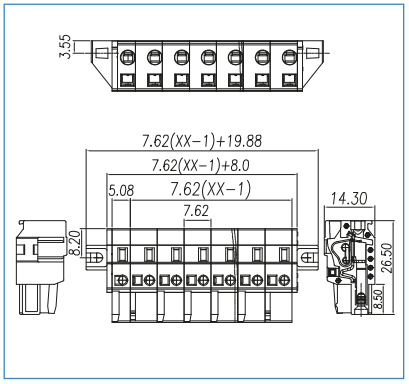

CFP202-7.62-SEJ	CFP202-7.62-F	CFP202-7.62-SF
CFP203-7.62-SEJ	CFP203-7.62-F	CFP203-7.62-SF
CFP204-7.62-SEJ	CFP204-7.62-F	CFP204-7.62-SF
CFP205-7.62-SEJ	CFP205-7.62-F	CFP205-7.62-SF
CFP206-7.62-SEJ	CFP206-7.62-F	CFP206-7.62-SF
CFP207-7.62-SEJ	CFP207-7.62-F	CFP207-7.62-SF
CFP208-7.62-SEJ	CFP208-7.62-F	CFP208-7.62-SF
CFP209-7.62-SEJ	CFP209-7.62-F	CFP209-7.62-SF
CFP210-7.62-SEJ	CFP210-7.62-F	CFP210-7.62-SF
CFP211-7.62-SEJ	CFP211-7.62-F	CFP211-7.62-SF
CFP212-7.62-SEJ	CFP212-7.62-F	CFP212-7.62-SF
CFP213-7.62-SEJ	CFP213-7.62-F	CFP213-7.62-SF
CFP214-7.62-SEJ	CFP214-7.62-F	CFP214-7.62-SF
CFP215-7.62-SEJ	CFP215-7.62-F	CFP215-7.62-SF
CFP216-7.62-SEJ	CFP216-7.62-F	CFP216-7.62-SF
CFP217-7.62-SEJ	CFP217-7.62-F	CFP217-7.62-SF
CFP218-7.62-SEJ	CFP218-7.62-F	CFP218-7.62-SF
CFP219-7.62-SEJ	CFP219-7.62-F	CFP219-7.62-SF
CFP220-7.62-SEJ	CFP220-7.62-F	CFP220-7.62-SF
CFP221-7.62-SEJ	CFP221-7.62-F	CFP221-7.62-SF
CFP222-7.62-SEJ	CFP222-7.62-F	CFP222-7.62-SF
CFP223-7.62-SEJ	CFP223-7.62-F	CFP223-7.62-SF
CFP224-7.62-SEJ	CFP224-7.62-F	CFP224-7.62-SF

euro-block

SERIE/PRODUCT SERIES	CMP1-5-CV	CMP1-5-CH
Passo / Pitch(mm)/ Rastermaß	5 mm	5 mm
Poli monoblocco/single mold poles/Polzahl	2÷24	2÷24
Vite / Screw / Schraube		
Corpo isolante / Housing / Gehäuse	PA66, UL 94V0	PA66, UL 94V0
Tensione nominale/Rated Voltage/Nennspannung	250V	250V
Corrente Nominale/Rated Current/Nennstrom	16A	16A
Sezione Nominale/Wire section /Nennquerschnitt		
Temperatura /Temperature /Temperatur	-40°C + 105°C	-40°C + 105°C
Coppia di torsione /Torque /Anzugsdrehmoment		
Lunghezza spellatura/Stripping lenght/Abisolierlänge		
VDE		
UL - cUL (file n.E34235)	15A-300V	15A-300V
*Colore standard/ Standard colour/ Standardfarbe	GY (grey)	GY (grey)
Colori a richiesta/Colours on request/Farben auf Anfrage		

*= da non specificare sul codice di ordinazione
Do not specify on ordering code
Muss im Bestellcode nicht angegeben werden

Per evitare sbalzi tra i morsetti ed i fori sul c.s. bisogna prevedere una interruzione quando il n. di poli è superiore a 30.

To avoid loss of pitch between terminal block and pcb it is necessary to interrupt the terminal row by poles higher than 30

Die Polzahl sollte maximal 30 betragen damit das Rastermaß von PCB und Leiterplattenklemme noch übereinstimmen

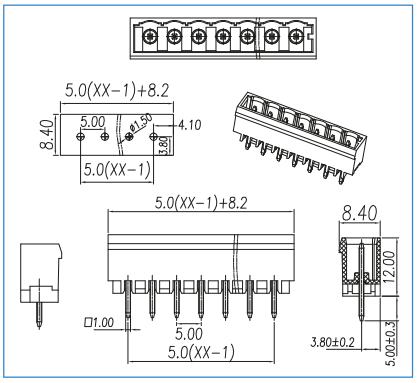

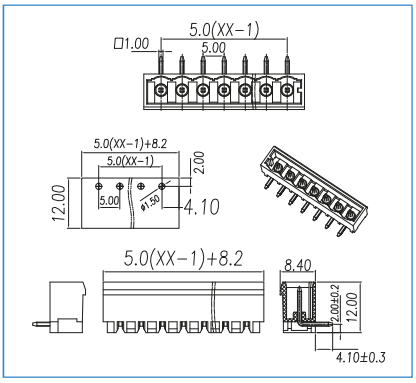

COME ORDINARE
HOW TO ORDER / BESTELLNUMMER

Series	n. poles	pitch	version	color	custom

PASSO / PITCH / RASTERMAß

2 POLI	CMP102-5-CV	CMP102-5-CH
3 POLI	CMP103-5-CV	CMP103-5-CH
	CMP104-5-CV	CMP104-5-CH
	CMP105-5-CV	CMP105-5-CH
	CMP106-5-CV	CMP106-5-CH
	CMP107-5-CV	CMP107-5-CH
	CMP108-5-CV	CMP108-5-CH
	CMP109-5-CV	CMP109-5-CH
	CMP110-5-CV	CMP110-5-CH
	CMP111-5-CV	CMP111-5-CH
	CMP112-5-CV	CMP112-5-CH
	CMP113-5-CV	CMP113-5-CH
	CMP114-5-CV	CMP114-5-CH
	CMP115-5-CV	CMP115-5-CH
	CMP116-5-CV	CMP116-5-CH
	CMP117-5-CV	CMP117-5-CH
	CMP118-5-CV	CMP118-5-CH
	CMP119-5-CV	CMP119-5-CH
	CMP120-5-CV	CMP120-5-CH
	CMP121-5-CV	CMP121-5-CH
	CMP122-5-CV	CMP122-5-CH
	CMP123-5-CV	CMP123-5-CH
24 POLI	CMP124-5-CV	CMP124-5-CH

CMP1-5-VP

5 mm
2÷24
PA66, UL 94V0
250V
16A
-40°C + 105°C
15A-300V
GY (grey)

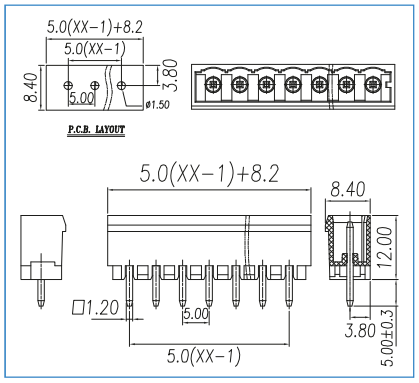

CMP1-5-HP

5 mm
2÷24
PA66, UL 94V0
250V
16A
-40°C + 105°C
15A-300V
GY (grey)

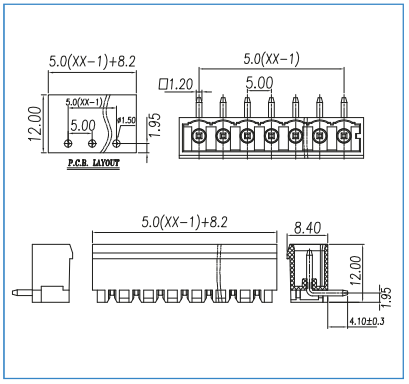

CMP1-5-CV-S

5 mm
2÷24
PA66, UL 94V0
250V
16A
-40°C + 105°C
15A-300V
LGY (light grey)

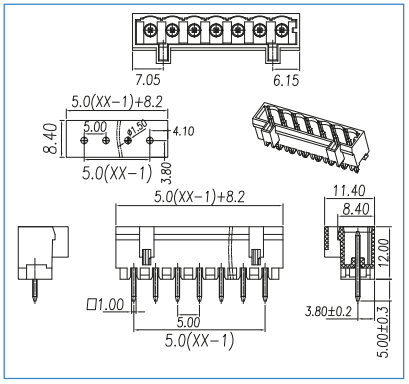

CMP102-5-VP	CMP102-5-HP	CMP102-5-CV-S
CMP103-5-VP	CMP103-5-HP	CMP103-5-CV-S
CMP104-5-VP	CMP104-5-HP	CMP104-5-CV-S
CMP105-5-VP	CMP105-5-HP	CMP105-5-CV-S
CMP106-5-VP	CMP106-5-HP	CMP106-5-CV-S
CMP107-5-VP	CMP107-5-HP	CMP107-5-CV-S
CMP108-5-VP	CMP108-5-HP	CMP108-5-CV-S
CMP109-5-VP	CMP109-5-HP	CMP109-5-CV-S
CMP110-5-VP	CMP110-5-HP	CMP110-5-CV-S
CMP111-5-VP	CMP111-5-HP	CMP111-5-CV-S
CMP112-5-VP	CMP112-5-HP	CMP112-5-CV-S
CMP113-5-VP	CMP113-5-HP	CMP113-5-CV-S
CMP114-5-VP	CMP114-5-HP	CMP114-5-CV-S
CMP115-5-VP	CMP115-5-HP	CMP115-5-CV-S
CMP116-5-VP	CMP116-5-HP	CMP116-5-CV-S
CMP117-5-VP	CMP117-5-HP	CMP117-5-CV-S
CMP118-5-VP	CMP118-5-HP	CMP118-5-CV-S
CMP119-5-VP	CMP119-5-HP	CMP119-5-CV-S
CMP120-5-VP	CMP120-5-HP	CMP120-5-CV-S
CMP121-5-VP	CMP121-5-HP	CMP121-5-CV-S
CMP122-5-VP	CMP122-5-HP	CMP122-5-CV-S
CMP123-5-VP	CMP123-5-HP	CMP123-5-CV-S
CMP124-5-VP	CMP124-5-HP	CMP124-5-CV-S

euro-block

SERIE/PRODUCT SERIES	CMP1-5-CH-S	CMP1-5-VP-S
Passo / Pitch(mm)/ Rastermaß	5 mm	5 mm
Poli monoblocco/single mold poles/Polzahl	2÷24	2÷24
Vite / Screw / Schraube		
Corpo isolante / Housing / Gehäuse	PA66, UL 94V0	PA66, UL 94V0
Tensione nominale/Rated Voltage/Nennspannung	250V	250V
Corrente Nominale/Rated Current/Nennstrom	16A	16A
Sezione Nominale/Wire section /Nennquerschnitt		
Temperatura /Temperature /Temperatur	-40°C + 105°C	-40°C + 105°C
Coppia di torsione /Torque /Anzugsdrehmoment		
Lunghezza spellatura/Stripping lenght/Abisolierlänge		
VDE		
UL - cUL (file n.E34235)	15A-300V	15A-300V
*Colore standard/ Standard colour/ Standardfarbe	LGY (light grey)	LGY (light grey)
Colori a richiesta/Colours on request/Farben auf Anfrage		

*= da non specificare sul codice di ordinazione
Do not specify on ordering code
Muss im Bestellcode nicht angegeben werden

Per evitare sbalzi tra i morsetti ed i fori sul c.s. bisogna prevedere una interruzione quando il n. di poli è superiore a 30.

To avoid loss of pitch between terminal block and pcb it is necessary to interrupt the terminal row by poles higher than 30

Die Polzahl sollte maximal 30 betragen damit das Rastermaß von PCB und Leiterplattenklemme noch übereinstimmen

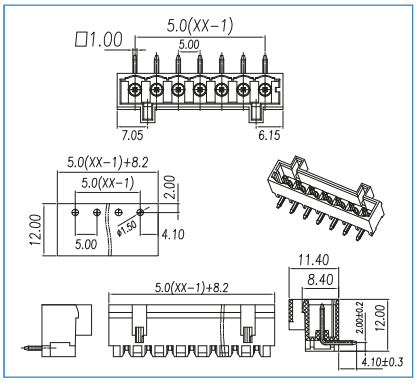

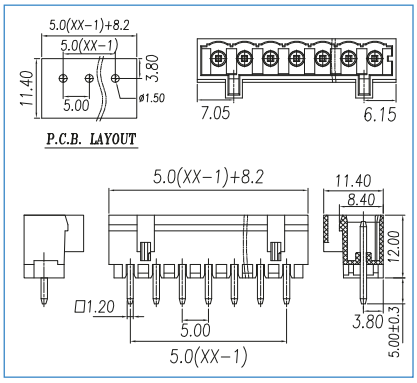

COME ORDINARE
HOW TO ORDER / BESTELLNUMMER

Series	n. poles	pitch	version	color	custom

PASSO / PITCH / RASTERMAß

2 POLI	CMP102-5-CH-S	CMP102-5-VP-S
3 POLI	CMP103-5-CH-S	CMP103-5-VP-S
	CMP104-5-CH-S	CMP104-5-VP-S
	CMP105-5-CH-S	CMP105-5-VP-S
	CMP106-5-CH-S	CMP106-5-VP-S
	CMP107-5-CH-S	CMP107-5-VP-S
	CMP108-5-CH-S	CMP108-5-VP-S
	CMP109-5-CH-S	CMP109-5-VP-S
	CMP110-5-CH-S	CMP110-5-VP-S
	CMP111-5-CH-S	CMP111-5-VP-S
	CMP112-5-CH-S	CMP112-5-VP-S
	CMP113-5-CH-S	CMP113-5-VP-S
	CMP114-5-CH-S	CMP114-5-VP-S
	CMP115-5-CH-S	CMP115-5-VP-S
	CMP116-5-CH-S	CMP116-5-VP-S
	CMP117-5-CH-S	CMP117-5-VP-S
	CMP118-5-CH-S	CMP118-5-VP-S
	CMP119-5-CH-S	CMP119-5-VP-S
	CMP120-5-CH-S	CMP120-5-VP-S
	CMP121-5-CH-S	CMP121-5-VP-S
	CMP122-5-CH-S	CMP122-5-VP-S
	CMP123-5-CH-S	CMP123-5-VP-S
24 POLI	CMP124-5-CH-S	CMP124-5-VP-S

CMP1-5-HP-S

5 mm
2÷24
PA66, UL 94V0
250V
16A
-40°C + 105°C
15A-300V
LGY (light grey)

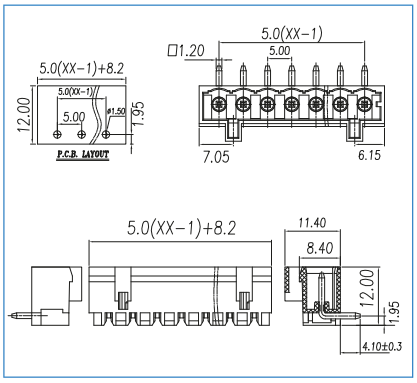

CMP1-5.08-CV

5,08 mm
2÷24
PA66, UL 94V0
250V
16A
-40°C + 105°C
15A-300V
OG (orange)

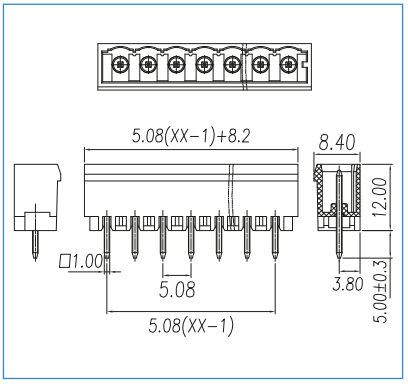

CMP1-5.08-CH

5,08 mm
2÷24
PA66, UL 94V0
250V
16A
-40°C + 105°C
15A-300V
OG (orange)

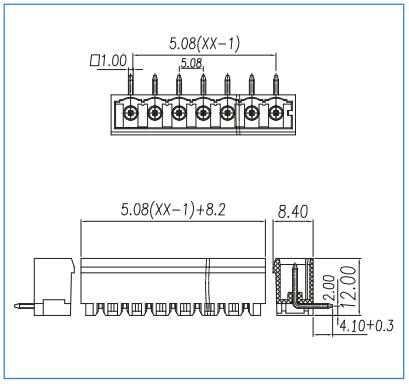

CMP102-5-HP-S	CMP102-5.08-CV	CMP102-5.08-CH
CMP103-5-HP-S	CMP103-5.08-CV	CMP103-5.08-CH
CMP104-5-HP-S	CMP104-5.08-CV	CMP104-5.08-CH
CMP105-5-HP-S	CMP105-5.08-CV	CMP105-5.08-CH
CMP106-5-HP-S	CMP106-5.08-CV	CMP106-5.08-CH
CMP107-5-HP-S	CMP107-5.08-CV	CMP107-5.08-CH
CMP108-5-HP-S	CMP108-5.08-CV	CMP108-5.08-CH
CMP109-5-HP-S	CMP109-5.08-CV	CMP109-5.08-CH
CMP110-5-HP-S	CMP110-5.08-CV	CMP110-5.08-CH
CMP111-5-HP-S	CMP111-5.08-CV	CMP111-5.08-CH
CMP112-5-HP-S	CMP112-5.08-CV	CMP112-5.08-CH
CMP113-5-HP-S	CMP113-5.08-CV	CMP113-5.08-CH
CMP114-5-HP-S	CMP114-5.08-CV	CMP114-5.08-CH
CMP115-5-HP-S	CMP115-5.08-CV	CMP115-5.08-CH
CMP116-5-HP-S	CMP116-5.08-CV	CMP116-5.08-CH
CMP117-5-HP-S	CMP117-5.08-CV	CMP117-5.08-CH
CMP118-5-HP-S	CMP118-5.08-CV	CMP118-5.08-CH
CMP119-5-HP-S	CMP119-5.08-CV	CMP119-5.08-CH
CMP120-5-HP-S	CMP120-5.08-CV	CMP120-5.08-CH
CMP121-5-HP-S	CMP121-5.08-CV	CMP121-5.08-CH
CMP122-5-HP-S	CMP122-5.08-CV	CMP122-5.08-CH
CMP123-5-HP-S	CMP123-5.08-CV	CMP123-5.08-CH
CMP124-5-HP-S	CMP124-5.08-CV	CMP124-5.08-CH

euro-block

SERIE/PRODUCT SERIES	CMP1-5.08-VP	CMP1-5.08-HP
Passo / Pitch(mm)/ Rastermaß	5,08 mm	5,08 mm
Poli monoblocco/single mold poles/Polzahl	2÷24	2÷24
Vite / Screw / Schraube		
Corpo isolante / Housing / Gehäuse	PA66, UL 94V0	PA66, UL 94V0
Tensione nominale/Rated Voltage/Nennspannung	250V	250V
Corrente Nominale/Rated Current/Nennstrom	16A	16A
Sezione Nominale/Wire section /Nennquerschnitt		
Temperatura /Temperature /Temperatur	-40°C + 105°C	-40°C + 105°C
Coppia di torsione /Torque /Anzugsdrehmoment		
Lunghezza spellatura/Stripping lenght/Abisolierlänge		
VDE		
UL - cUL (file n.E34235)	15A-300V	15A-300V
*Colore standard/ Standard colour/ Standardfarbe	OG (orange)	OG (orange)
Colori a richiesta/Colours on request/Farben auf Anfrage		

*= da non specificare sul codice di ordinazione
Do not specify on ordering code
Muss im Bestellcode nicht angegeben werden

Per evitare sbalzi tra i morsetti ed i fori sul c.s. bisogna prevedere una interruzione quando il n. di poli è superiore a 30.

To avoid loss of pitch between terminal block and pcb it is necessary to interrupt the terminal row by poles higher than 30

Die Polzahl sollte maximal 30 betragen damit das Rastermaß von PCB und Leiterplattenklemme noch übereinstimmen

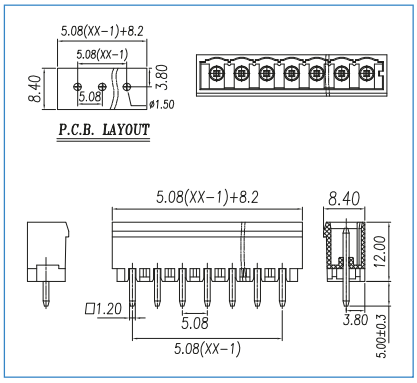

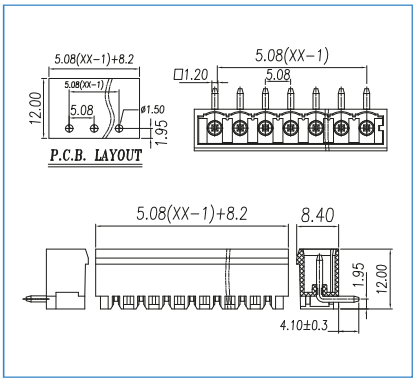

COME ORDINARE
HOW TO ORDER / BESTELLNUMMER

Series	n. poles	pitch	version	color	custom

PASSO / PITCH / RASTERMAß

2 POLI	CMP102-5.08-VP	CMP102-5.08-HP
3 POLI	CMP103-5.08-VP	CMP103-5.08-HP
	CMP104-5.08-VP	CMP104-5.08-HP
	CMP105-5.08-VP	CMP105-5.08-HP
	CMP106-5.08-VP	CMP106-5.08-HP
	CMP107-5.08-VP	CMP107-5.08-HP
	CMP108-5.08-VP	CMP108-5.08-HP
	CMP109-5.08-VP	CMP109-5.08-HP
	CMP110-5.08-VP	CMP110-5.08-HP
	CMP111-5.08-VP	CMP111-5.08-HP
	CMP112-5.08-VP	CMP112-5.08-HP
	CMP113-5.08-VP	CMP113-5.08-HP
	CMP114-5.08-VP	CMP114-5.08-HP
	CMP115-5.08-VP	CMP115-5.08-HP
	CMP116-5.08-VP	CMP116-5.08-HP
	CMP117-5.08-VP	CMP117-5.08-HP
	CMP118-5.08-VP	CMP118-5.08-HP
	CMP119-5.08-VP	CMP119-5.08-HP
	CMP120-5.08-VP	CMP120-5.08-HP
	CMP121-5.08-VP	CMP121-5.08-HP
	CMP122-5.08-VP	CMP122-5.08-HP
	CMP123-5.08-VP	CMP123-5.08-HP
24 POLI	CMP124-5.08-VP	CMP124-5.08-HP

CMP1-5.08-CV-S

5,08 mm
2÷24
PA66, UL 94V0
250V
16A
-40°C + 105°C
15A-300V
OG (orange)

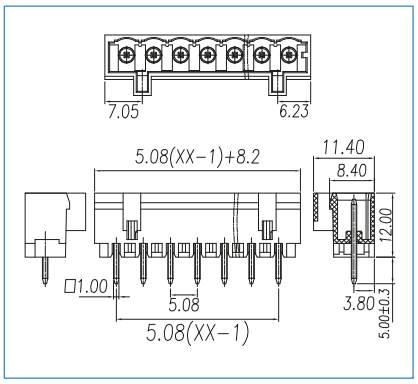

CMP1-5.08-CH-S

5,08 mm
2÷24
PA66, UL 94V0
250V
16A
-40°C + 105°C
15A-300V
OG (orange)

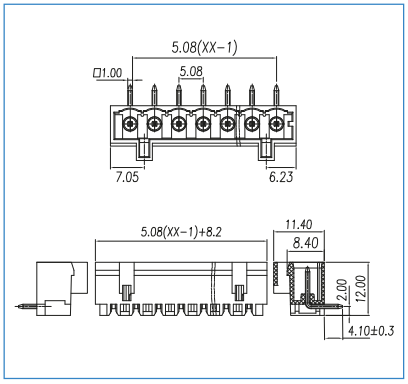

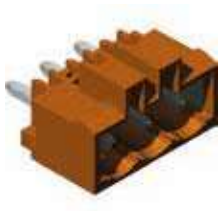

CMP1-5.08-VP-S

5,08 mm
2÷24
PA66, UL 94V0
250V
16A
-40°C + 105°C
15A-300V
OG (orange)

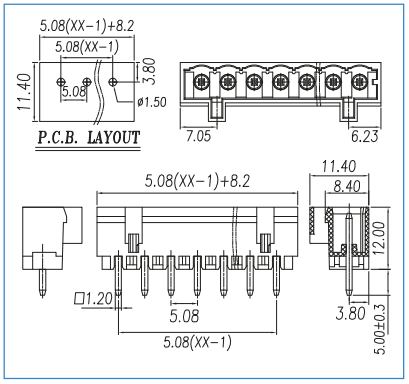

CMP102-5.08-CV-S	CMP102-5.08-CH-S	CMP102-5.08-VP-S
CMP103-5.08-CV-S	CMP103-5.08-CH-S	CMP103-5.08-VP-S
CMP104-5.08-CV-S	CMP104-5.08-CH-S	CMP104-5.08-VP-S
CMP105-5.08-CV-S	CMP105-5.08-CH-S	CMP105-5.08-VP-S
CMP106-5.08-CV-S	CMP106-5.08-CH-S	CMP106-5.08-VP-S
CMP107-5.08-CV-S	CMP107-5.08-CH-S	CMP107-5.08-VP-S
CMP108-5.08-CV-S	CMP108-5.08-CH-S	CMP108-5.08-VP-S
CMP109-5.08-CV-S	CMP109-5.08-CH-S	CMP109-5.08-VP-S
CMP110-5.08-CV-S	CMP110-5.08-CH-S	CMP110-5.08-VP-S
CMP111-5.08-CV-S	CMP111-5.08-CH-S	CMP111-5.08-VP-S
CMP112-5.08-CV-S	CMP112-5.08-CH-S	CMP112-5.08-VP-S
CMP113-5.08-CV-S	CMP113-5.08-CH-S	CMP113-5.08-VP-S
CMP114-5.08-CV-S	CMP114-5.08-CH-S	CMP114-5.08-VP-S
CMP115-5.08-CV-S	CMP115-5.08-CH-S	CMP115-5.08-VP-S
CMP116-5.08-CV-S	CMP116-5.08-CH-S	CMP116-5.08-VP-S
CMP117-5.08-CV-S	CMP117-5.08-CH-S	CMP117-5.08-VP-S
CMP118-5.08-CV-S	CMP118-5.08-CH-S	CMP118-5.08-VP-S
CMP119-5.08-CV-S	CMP119-5.08-CH-S	CMP119-5.08-VP-S
CMP120-5.08-CV-S	CMP120-5.08-CH-S	CMP120-5.08-VP-S
CMP121-5.08-CV-S	CMP121-5.08-CH-S	CMP121-5.08-VP-S
CMP122-5.08-CV-S	CMP122-5.08-CH-S	CMP122-5.08-VP-S
CMP123-5.08-CV-S	CMP123-5.08-CH-S	CMP123-5.08-VP-S
CMP124-5.08-CV-S	CMP124-5.08-CH-S	CMP124-5.08-VP-S

euro-block

SERIE/PRODUCT SERIES	CMP1-5.08-HP-S	CMP2-7.5-CV
Passo / Pitch(mm)/ Rastermaß	5,08 mm	7,5 mm
Poli monoblocco/single mold poles/Polzahl	2÷24	2÷24
Vite / Screw / Schraube		
Corpo isolante / Housing / Gehäuse	PA66, UL 94V0	PA66, UL 94V0
Tensione nominale/Rated Voltage/Nennspannung	250V	250V
Corrente Nominale/Rated Current/Nennstrom	16A	16A
Sezione Nominale/Wire section /Nennquerschnitt		
Temperatura /Temperature /Temperatur	-40°C + 105°C	-40°C + 105°C
Coppia di torsione /Torque /Anzugsdrehmoment		
Lunghezza spellatura/Stripping lenght/Abisolierlänge		
VDE		
UL - cUL (file n.E34235)	15A-300V	15A-300V
*Colore standard/ Standard colour/ Standardfarbe	OG (orange)	GY (grey)
Colori a richiesta/Colours on request/Farben auf Anfrage		

*= da non specificare sul codice di ordinazione
Do not specify on ordering code
Muss im Bestellcode nicht angegeben werden

Per evitare sbalzi tra i morsetti ed i fori sul c.s. bisogna prevedere una interruzione quando il n. di poli è superiore a 30.

To avoid loss of pitch between terminal block and pcb it is necessary to interrupt the terminal row by poles higher than 30

Die Polzahl sollte maximal 30 betragen damit das Rastermaß von PCB und Leiterplattenklemme noch übereinstimmen

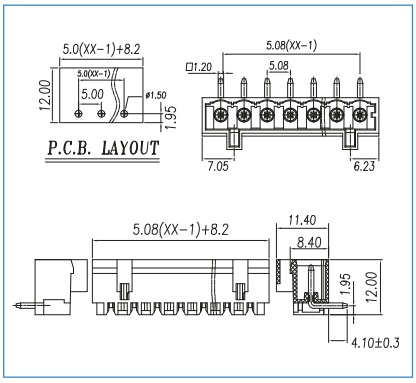

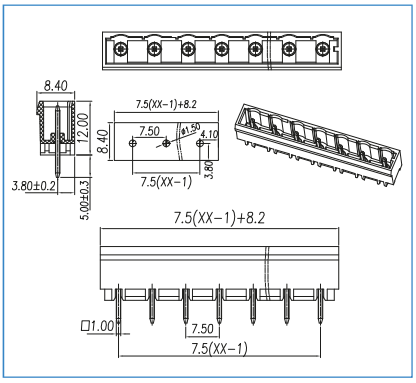

COME ORDINARE
HOW TO ORDER / BESTELLNUMMER

Series	n. poles	pitch	version	color	custom

PASSO / PITCH / RASTERMAß

2 POLI	CMP102-5.08-HP-S	CMP202-7.5-CV
3 POLI	CMP103-5.08-HP-S	CMP203-7.5-CV
	CMP104-5.08-HP-S	CMP204-7.5-CV
	CMP105-5.08-HP-S	CMP205-7.5-CV
	CMP106-5.08-HP-S	CMP206-7.5-CV
	CMP107-5.08-HP-S	CMP207-7.5-CV
	CMP108-5.08-HP-S	CMP208-7.5-CV
	CMP109-5.08-HP-S	CMP209-7.5-CV
	CMP110-5.08-HP-S	CMP210-7.5-CV
	CMP111-5.08-HP-S	CMP211-7.5-CV
	CMP112-5.08-HP-S	CMP212-7.5-CV
	CMP113-5.08-HP-S	CMP213-7.5-CV
	CMP114-5.08-HP-S	CMP214-7.5-CV
	CMP115-5.08-HP-S	CMP215-7.5-CV
	CMP116-5.08-HP-S	CMP216-7.5-CV
	CMP117-5.08-HP-S	CMP217-7.5-CV
	CMP118-5.08-HP-S	CMP218-7.5-CV
	CMP119-5.08-HP-S	CMP219-7.5-CV
	CMP120-5.08-HP-S	CMP220-7.5-CV
	CMP121-5.08-HP-S	CMP221-7.5-CV
	CMP122-5.08-HP-S	CMP222-7.5-CV
	CMP123-5.08-HP-S	CMP223-7.5-CV
24 POLI	CMP124-5.08-HP-S	CMP224-7.5-CV

CMP2-7.5-CH

7,5 mm
2÷24
PA66, UL 94V0
250V
16A
-40°C + 105°C
15A-300V
GY (grey)

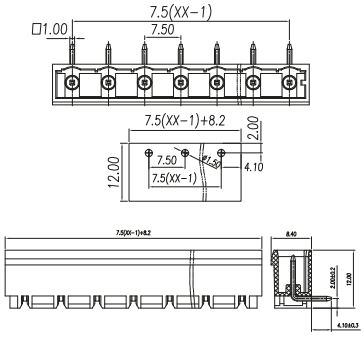

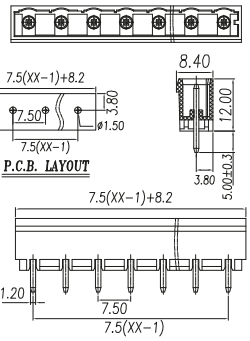

CMP2-7.5-VP

7,5 mm
2÷24
PA66, UL 94V0
250V
16A
-40°C + 105°C
15A-300V
GY (grey)

CMP2-7.5-HP

7,5 mm
2÷24
PA66, UL 94V0
250V
16A
-40°C + 105°C
15A-300V
GY (grey)

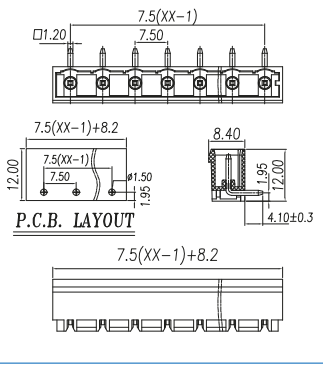

CMP202-7.5-CH	CMP202-7.5-VP	CMP202-7.5-HP
CMP203-7.5-CH	CMP203-7.5-VP	CMP203-7.5-HP
CMP204-7.5-CH	CMP204-7.5-VP	CMP204-7.5-HP
CMP205-7.5-CH	CMP205-7.5-VP	CMP205-7.5-HP
CMP206-7.5-CH	CMP206-7.5-VP	CMP206-7.5-HP
CMP207-7.5-CH	CMP207-7.5-VP	CMP207-7.5-HP
CMP208-7.5-CH	CMP208-7.5-VP	CMP208-7.5-HP
CMP209-7.5-CH	CMP209-7.5-VP	CMP209-7.5-HP
CMP210-7.5-CH	CMP210-7.5-VP	CMP210-7.5-HP
CMP211-7.5-CH	CMP211-7.5-VP	CMP211-7.5-HP
CMP212-7.5-CH	CMP212-7.5-VP	CMP212-7.5-HP
CMP213-7.5-CH	CMP213-7.5-VP	CMP213-7.5-HP
CMP214-7.5-CH	CMP214-7.5-VP	CMP214-7.5-HP
CMP215-7.5-CH	CMP215-7.5-VP	CMP215-7.5-HP
CMP216-7.5-CH	CMP216-7.5-VP	CMP216-7.5-HP
CMP217-7.5-CH	CMP217-7.5-VP	CMP217-7.5-HP
CMP218-7.5-CH	CMP218-7.5-VP	CMP218-7.5-HP
CMP219-7.5-CH	CMP219-7.5-VP	CMP219-7.5-HP
CMP220-7.5-CH	CMP220-7.5-VP	CMP220-7.5-HP
CMP221-7.5-CH	CMP221-7.5-VP	CMP221-7.5-HP
CMP222-7.5-CH	CMP222-7.5-VP	CMP222-7.5-HP
CMP223-7.5-CH	CMP223-7.5-VP	CMP223-7.5-HP
CMP224-7.5-CH	CMP224-7.5-VP	CMP224-7.5-HP

euro-block

SERIE/PRODUCT SERIES	CMP2-7.5-CV-S	CMP2-7.5-CH-S
Passo / Pitch(mm)/ Rastermaß	7,5 mm	7,5 mm
Poli monoblocco/single mold poles/Polzahl	2÷24	2÷24
Vite / Screw / Schraube		
Corpo isolante / Housing / Gehäuse	PA66, UL 94V0	PA66, UL 94V0
Tensione nominale/Rated Voltage/Nennspannung	250V	250V
Corrente Nominale/Rated Current/Nennstrom	16A	16A
Sezione Nominale/Wire section /Nennquerschnitt		
Temperatura /Temperature /Temperatur	-40°C + 105°C	-40°C + 105°C
Coppia di torsione /Torque /Anzugsdrehmoment		
Lunghezza spellatura/Stripping lenght/Abisolierlänge		
VDE		
UL - cUL (file n.E34235)	15A-300V	15A-300V
*Colore standard/ Standard colour/ Standardfarbe	LGY (light grey)	LGY (light grey)
Colori a richiesta/Colours on request/Farben auf Anfrage		

*= da non specificare sul codice di ordinazione
Do not specify on ordering code
Muss im Bestellcode nicht angegeben werden

Per evitare sbalzi tra i morsetti ed i fori sul c.s. bisogna prevedere una interruzione quando il n. di poli è superiore a 30.

To avoid loss of pitch between terminal block and pcb it is necessary to interrupt the terminal row by poles higher than 30

Die Polzahl sollte maximal 30 betragen damit das Rastermaß von PCB und Leiterplattenklemme noch übereinstimmen

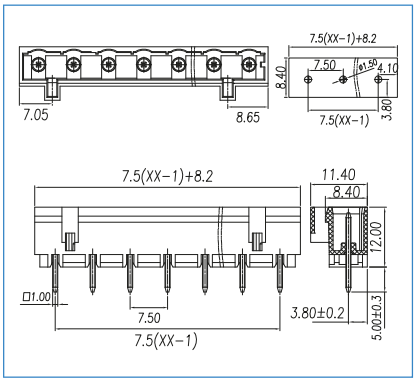

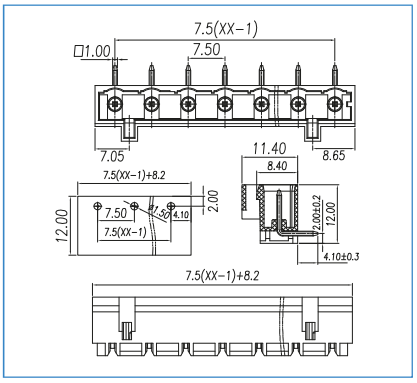

COME ORDINARE
HOW TO ORDER / BESTELLNUMMER

Series	n. poles	pitch	version	color	custom

PASSO / PITCH / RASTERMAß

2 POLI	CMP202-7.5-CV-S	CMP202-7.5-CH-S
3 POLI	CMP203-7.5-CV-S	CMP203-7.5-CH-S
	CMP204-7.5-CV-S	CMP204-7.5-CH-S
	CMP205-7.5-CV-S	CMP205-7.5-CH-S
	CMP206-7.5-CV-S	CMP206-7.5-CH-S
	CMP207-7.5-CV-S	CMP207-7.5-CH-S
	CMP208-7.5-CV-S	CMP208-7.5-CH-S
	CMP209-7.5-CV-S	CMP209-7.5-CH-S
	CMP210-7.5-CV-S	CMP210-7.5-CH-S
	CMP211-7.5-CV-S	CMP211-7.5-CH-S
	CMP212-7.5-CV-S	CMP212-7.5-CH-S
	CMP213-7.5-CV-S	CMP213-7.5-CH-S
	CMP214-7.5-CV-S	CMP214-7.5-CH-S
	CMP215-7.5-CV-S	CMP215-7.5-CH-S
	CMP216-7.5-CV-S	CMP216-7.5-CH-S
	CMP217-7.5-CV-S	CMP217-7.5-CH-S
	CMP218-7.5-CV-S	CMP218-7.5-CH-S
	CMP219-7.5-CV-S	CMP219-7.5-CH-S
	CMP220-7.5-CV-S	CMP220-7.5-CH-S
	CMP221-7.5-CV-S	CMP221-7.5-CH-S
	CMP222-7.5-CV-S	CMP222-7.5-CH-S
	CMP223-7.5-CV-S	CMP223-7.5-CH-S
24 POLI	CMP224-7.5-CV-S	CMP224-7.5-CH-S

CMP2-7.5-VP-S	CMP2-7.5-HP-S	CMP2-7.62-CV
7,5 mm	7,5 mm	7,62 mm
2÷24	2÷24	2÷24
PA66, UL 94V0	PA66, UL 94V0	PA66, UL 94V0
250V	250V	250V
16A	16A	16A
-40°C + 105°C	-40°C + 105°C	-40°C + 105°C
c UL us 15A-300V	c UL us 15A-300V	c UL us 15A-300V
LGY (light grey)	LGY (light grey)	OG (orange)

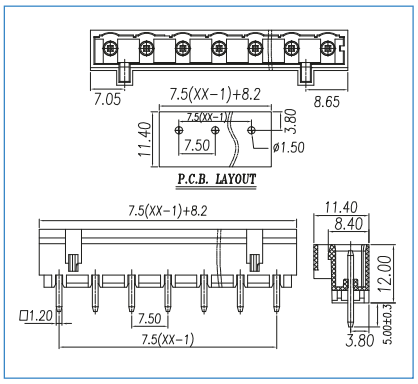

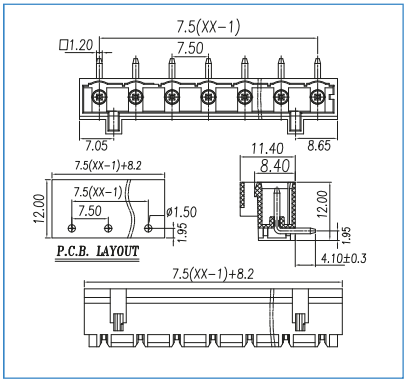

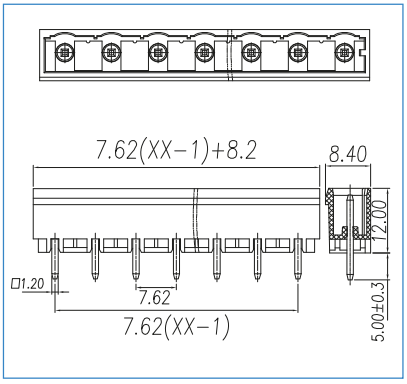

CMP202-7.5-VP-S	CMP202-7.5-HP-S	CMP202-7.62-CV
CMP203-7.5-VP-S	CMP203-7.5-HP-S	CMP203-7.62-CV
CMP204-7.5-VP-S	CMP204-7.5-HP-S	CMP204-7.62-CV
CMP205-7.5-VP-S	CMP205-7.5-HP-S	CMP205-7.62-CV
CMP206-7.5-VP-S	CMP206-7.5-HP-S	CMP206-7.62-CV
CMP207-7.5-VP-S	CMP207-7.5-HP-S	CMP207-7.62-CV
CMP208-7.5-VP-S	CMP208-7.5-HP-S	CMP208-7.62-CV
CMP209-7.5-VP-S	CMP209-7.5-HP-S	CMP209-7.62-CV
CMP210-7.5-VP-S	CMP210-7.5-HP-S	CMP210-7.62-CV
CMP211-7.5-VP-S	CMP211-7.5-HP-S	CMP211-7.62-CV
CMP212-7.5-VP-S	CMP212-7.5-HP-S	CMP212-7.62-CV
CMP213-7.5-VP-S	CMP213-7.5-HP-S	CMP213-7.62-CV
CMP214-7.5-VP-S	CMP214-7.5-HP-S	CMP214-7.62-CV
CMP215-7.5-VP-S	CMP215-7.5-HP-S	CMP215-7.62-CV
CMP216-7.5-VP-S	CMP216-7.5-HP-S	CMP216-7.62-CV
CMP217-7.5-VP-S	CMP217-7.5-HP-S	CMP217-7.62-CV
CMP218-7.5-VP-S	CMP218-7.5-HP-S	CMP218-7.62-CV
CMP219-7.5-VP-S	CMP219-7.5-HP-S	CMP219-7.62-CV
CMP220-7.5-VP-S	CMP220-7.5-HP-S	CMP220-7.62-CV
CMP221-7.5-VP-S	CMP221-7.5-HP-S	CMP221-7.62-CV
CMP222-7.5-VP-S	CMP222-7.5-HP-S	CMP222-7.62-CV
CMP223-7.5-VP-S	CMP223-7.5-HP-S	CMP223-7.62-CV
CMP224-7.5-VP-S	CMP224-7.5-HP-S	CMP224-7.62-CV

euro-block

SERIE/PRODUCT SERIES	CMP2-7.62-CH	CMP2-7.62-VP
Passo / Pitch(mm)/ Rastermaß	7,62 mm	7,62 mm
Poli monoblocco/single mold poles/Polzahl	2÷24	2÷24
Vite / Screw / Schraube		
Corpo isolante / Housing / Gehäuse	PA66, UL 94V0	PA66, UL 94V0
Tensione nominale/Rated Voltage/Nennspannung	250V	250V
Corrente Nominale/Rated Current/Nennstrom	16A	16A
Sezione Nominale/Wire section /Nennquerschnitt		
Temperatura /Temperature /Temperatur	-40°C + 105°C	-40°C + 105°C
Coppia di torsione /Torque /Anzugsdrehmoment		
Lunghezza spellatura/Stripping lenght/Abisolierlänge		
VDE		
UL - cUL (file n.E34235)	15A-300V	15A-300V
*Colore standard/ Standard colour/ Standardfarbe	OG (orange)	OG (orange)
Colori a richiesta/Colours on request/Farben auf Anfrage		

*= da non specificare sul codice di ordinazione
Do not specify on ordering code
Muss im Bestellcode nicht angegeben werden

Per evitare sbalzi tra i morsetti ed i fori sul c.s. bisogna prevedere una interruzione quando il n. di poli è superiore a 30.

To avoid loss of pitch between terminal block and pcb it is necessary to interrupt the terminal row by poles higher than 30

Die Polzahl sollte maximal 30 betragen damit das Rastermaß von PCB und Leiterplattenklemme noch übereinstimmen

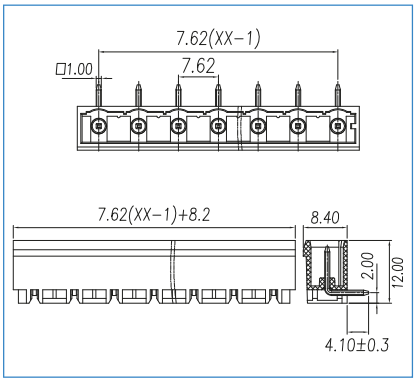

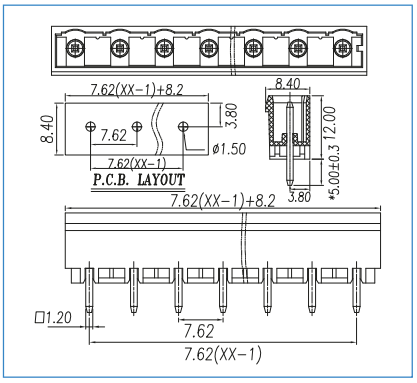

COME ORDINARE
HOW TO ORDER / BESTELLNUMMER

Series	n. poles	pitch	version	color	custom

PASSO / PITCH / RASTERMAß

2 POLI	CMP202-7.62-CH	CMP202-7.62-VP
3 POLI	CMP203-7.62-CH	CMP203-7.62-VP
	CMP204-7.62-CH	CMP204-7.62-VP
	CMP205-7.62-CH	CMP205-7.62-VP
	CMP206-7.62-CH	CMP206-7.62-VP
	CMP207-7.62-CH	CMP207-7.62-VP
	CMP208-7.62-CH	CMP208-7.62-VP
	CMP209-7.62-CH	CMP209-7.62-VP
	CMP210-7.62-CH	CMP210-7.62-VP
	CMP211-7.62-CH	CMP211-7.62-VP
	CMP212-7.62-CH	CMP212-7.62-VP
	CMP213-7.62-CH	CMP213-7.62-VP
	CMP214-7.62-CH	CMP214-7.62-VP
	CMP215-7.62-CH	CMP215-7.62-VP
	CMP216-7.62-CH	CMP216-7.62-VP
	CMP217-7.62-CH	CMP217-7.62-VP
	CMP218-7.62-CH	CMP218-7.62-VP
	CMP219-7.62-CH	CMP219-7.62-VP
	CMP220-7.62-CH	CMP220-7.62-VP
	CMP221-7.62-CH	CMP221-7.62-VP
	CMP222-7.62-CH	CMP222-7.62-VP
	CMP223-7.62-CH	CMP223-7.62-VP
24 POLI	CMP224-7.62-CH	CMP224-7.62-VP

CMP2-7.62-HP

7,62 mm
2÷24
PA66, UL 94V0
250V
16A
-40°C + 105°C
15A-300V
OG (orange)

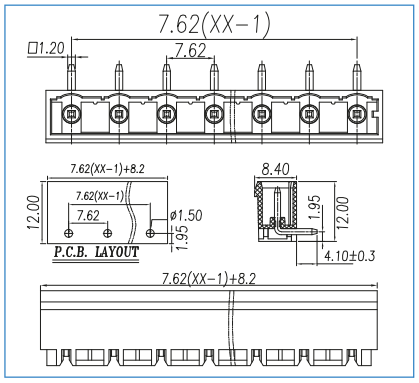

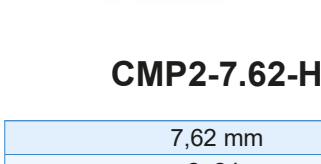

CMP2-7.62-CV-S

7,62 mm
2÷24
PA66, UL 94V0
250V
16A
-40°C + 105°C
15A-300V
OG (orange)

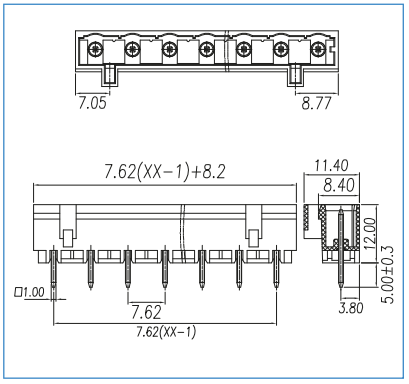

CMP2-7.62-CH-S

7,62 mm
2÷24
PA66, UL 94V0
250V
16A
-40°C + 105°C
15A-300V
OG (orange)

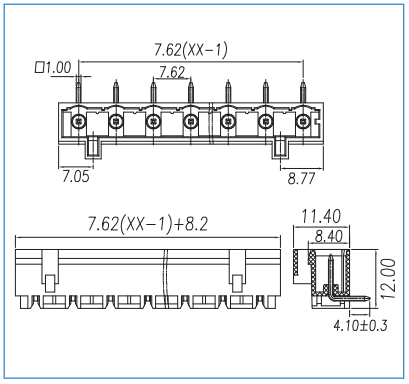

CMP202-7.62-HP	CMP202-7.62-CV-S	CMP202-7.62-CH-S
CMP203-7.62-HP	CMP203-7.62-CV-S	CMP203-7.62-CH-S
CMP204-7.62-HP	CMP204-7.62-CV-S	CMP204-7.62-CH-S
CMP205-7.62-HP	CMP205-7.62-CV-S	CMP205-7.62-CH-S
CMP206-7.62-HP	CMP206-7.62-CV-S	CMP206-7.62-CH-S
CMP207-7.62-HP	CMP207-7.62-CV-S	CMP207-7.62-CH-S
CMP208-7.62-HP	CMP208-7.62-CV-S	CMP208-7.62-CH-S
CMP209-7.62-HP	CMP209-7.62-CV-S	CMP209-7.62-CH-S
CMP210-7.62-HP	CMP210-7.62-CV-S	CMP210-7.62-CH-S
CMP211-7.62-HP	CMP211-7.62-CV-S	CMP211-7.62-CH-S
CMP212-7.62-HP	CMP212-7.62-CV-S	CMP212-7.62-CH-S
CMP213-7.62-HP	CMP213-7.62-CV-S	CMP213-7.62-CH-S
CMP214-7.62-HP	CMP214-7.62-CV-S	CMP214-7.62-CH-S
CMP215-7.62-HP	CMP215-7.62-CV-S	CMP215-7.62-CH-S
CMP216-7.62-HP	CMP216-7.62-CV-S	CMP216-7.62-CH-S
CMP217-7.62-HP	CMP217-7.62-CV-S	CMP217-7.62-CH-S
CMP218-7.62-HP	CMP218-7.62-CV-S	CMP218-7.62-CH-S
CMP219-7.62-HP	CMP219-7.62-CV-S	CMP219-7.62-CH-S
CMP220-7.62-HP	CMP220-7.62-CV-S	CMP220-7.62-CH-S
CMP221-7.62-HP	CMP221-7.62-CV-S	CMP221-7.62-CH-S
CMP222-7.62-HP	CMP222-7.62-CV-S	CMP222-7.62-CH-S
CMP223-7.62-HP	CMP223-7.62-CV-S	CMP223-7.62-CH-S
CMP224-7.62-HP	CMP224-7.62-CV-S	CMP224-7.62-CH-S

euro-block

SERIE/PRODUCT SERIES	CMP2-7.62-VP-S	CMP2-7.62-HP-S
Passo / Pitch(mm)/ Rastermaß	7,62 mm	7,62 mm
Poli monoblocco/single mold poles/Polzahl	2÷24	2÷24
Vite / Screw / Schraube		
Corpo isolante / Housing / Gehäuse	PA66, UL 94V0	PA66, UL 94V0
Tensione nominale/Rated Voltage/Nennspannung	250V	250V
Corrente Nominale/Rated Current/Nennstrom	16A	16A
Sezione Nominale/Wire section /Nennquerschnitt		
Temperatura /Temperature /Temperatur	-40°C + 105°C	-40°C + 105°C
Coppia di torsione /Torque /Anzugsdrehmoment		
Lunghezza spellatura/Stripping lenght/Abisolierlänge		
VDE		
UL - cUL (file n.E34235)	15A-300V	15A-300V
*Colore standard/ Standard colour/ Standardfarbe	OG (orange)	OG (orange)
Colori a richiesta/Colours on request/Farben auf Anfrage		

*= da non specificare sul codice di ordinazione
Do not specify on ordering code
Muss im Bestellcode nicht angegeben werden

Per evitare sbalzi tra i morsetti ed i fori sul c.s. bisogna prevedere una interruzione quando il n. di poli è superiore a 30.

To avoid loss of pitch between terminal block and pcb it is necessary to interrupt the terminal row by poles higher than 30

Die Polzahl sollte maximal 30 betragen damit das Rastermaß von PCB und Leiterplattenklemme noch übereinstimmen

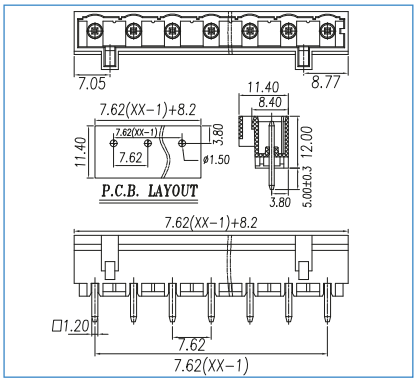

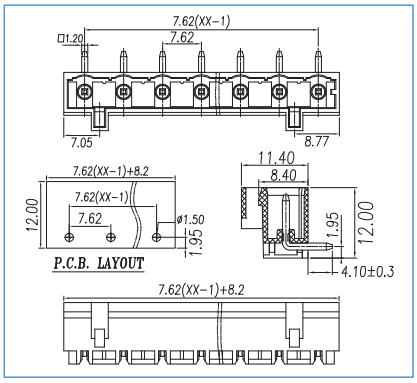

COME ORDINARE
HOW TO ORDER / BESTELLNUMMER

Series	n. poles	pitch	version	color	custom

PASSO / PITCH / RASTERMAß

2 POLI	CMP202-7.62-VP-S	CMP202-7.62-HP-S
3 POLI	CMP203-7.62-VP-S	CMP203-7.62-HP-S
	CMP204-7.62-VP-S	CMP204-7.62-HP-S
	CMP205-7.62-VP-S	CMP205-7.62-HP-S
	CMP206-7.62-VP-S	CMP206-7.62-HP-S
	CMP207-7.62-VP-S	CMP207-7.62-HP-S
	CMP208-7.62-VP-S	CMP208-7.62-HP-S
	CMP209-7.62-VP-S	CMP209-7.62-HP-S
	CMP210-7.62-VP-S	CMP210-7.62-HP-S
	CMP211-7.62-VP-S	CMP211-7.62-HP-S
	CMP212-7.62-VP-S	CMP212-7.62-HP-S
	CMP213-7.62-VP-S	CMP213-7.62-HP-S
	CMP214-7.62-VP-S	CMP214-7.62-HP-S
	CMP215-7.62-VP-S	CMP215-7.62-HP-S
	CMP216-7.62-VP-S	CMP216-7.62-HP-S
	CMP217-7.62-VP-S	CMP217-7.62-HP-S
	CMP218-7.62-VP-S	CMP218-7.62-HP-S
	CMP219-7.62-VP-S	CMP219-7.62-HP-S
	CMP220-7.62-VP-S	CMP220-7.62-HP-S
	CMP221-7.62-VP-S	CMP221-7.62-HP-S
	CMP222-7.62-VP-S	CMP222-7.62-HP-S
	CMP223-7.62-VP-S	CMP223-7.62-HP-S
24 POLI	CMP224-7.62-VP-S	CMP224-7.62-HP-S

CFP3-5	CFP3-5-P	CFP3-5-F
5 mm	5 mm	5 mm
2÷24	2÷24	2÷24
PA66, UL 94V0	PA66, UL 94V0	PA66, UL 94V0
250V	250V	250V
16A	16A	16A
2,5 mm2 28÷12AWG	2,5 mm2 28÷12AWG	2,5 mm2 28÷12AWG
-40°C + 105°C	-40°C + 105°C	-40°C + 105°C
8 mm		
	8 mm	8 mm
15A-300V	15A-300V	15A-300V
GY (grey)	GY (grey)	GY (grey)

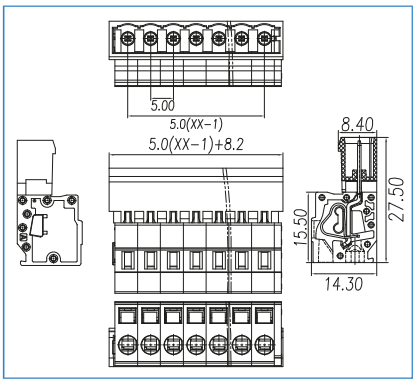

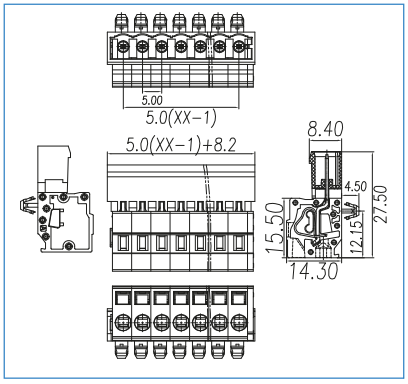

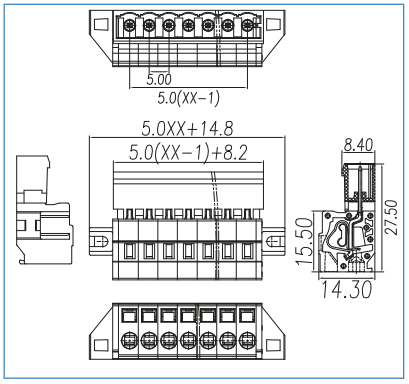

CFP302-5	CFP302-5-P	CFP302-5-F
CFP303-5	CFP303-5-P	CFP303-5-F
CFP304-5	CFP304-5-P	CFP304-5-F
CFP305-5	CFP305-5-P	CFP305-5-F
CFP306-5	CFP306-5-P	CFP306-5-F
CFP307-5	CFP307-5-P	CFP307-5-F
CFP308-5	CFP308-5-P	CFP308-5-F
CFP309-5	CFP309-5-P	CFP309-5-F
CFP310-5	CFP310-5-P	CFP310-5-F
CFP311-5	CFP311-5-P	CFP311-5-F
CFP312-5	CFP312-5-P	CFP312-5-F
CFP313-5	CFP313-5-P	CFP313-5-F
CFP314-5	CFP314-5-P	CFP314-5-F
CFP315-5	CFP315-5-P	CFP315-5-F
CFP316-5	CFP316-5-P	CFP316-5-F
CFP317-5	CFP317-5-P	CFP317-5-F
CFP318-5	CFP318-5-P	CFP318-5-F
CFP319-5	CFP319-5-P	CFP319-5-F
CFP320-5	CFP320-5-P	CFP320-5-F
CFP321-5	CFP321-5-P	CFP321-5-F
CFP322-5	CFP322-5-P	CFP322-5-F
CFP323-5	CFP323-5-P	CFP323-5-F
CFP324-5	CFP324-5-P	CFP324-5-F

euro-block

SERIE/PRODUCT SERIES	CFP3-5-S	CFP3-5-SP
Passo / Pitch(mm)/ Rastermaß	5 mm	5 mm
Poli monoblocco/single mold poles/Polzahl	2÷24	2÷24
Vite / Screw / Schraube		
Corpo isolante / Housing / Gehäuse	PA66, UL 94V0	PA66, UL 94V0
Tensione nominale/Rated Voltage/Nennspannung	250V	250V
Corrente Nominale/Rated Current/Nennstrom	16A	16A
Sezione Nominale/Wire section /Nenn querschnitt	2,5 mm2 28÷12 AWG	2,5 mm2 28÷12 AWG
Temperatura /Temperature /Temperatur	-40°C + 105°C	-40°C + 105°C
Coppia di torsione /Torque /Anzugsdrehmoment		
Lunghezza spellatura/Stripping lenght/Abisolierlänge	8 mm	8 mm
VDE		
UL - cUL (file n.E34235)	15A-300V	15A-300V
*Colore standard/ Standard colour/ Standardfarbe	LGY (light grey)	LGY (light grey)
Colori a richiesta/Colours on request/Farben auf Anfrage		

*= da non specificare sul codice di ordinazione
Do not specify on ordering code
Muss im Bestellcode nicht angegeben werden

Per evitare sbalzi tra i morsetti ed i fori sul c.s. bisogna prevedere una interruzione quando il n. di poli è superiore a 30.

To avoid loss of pitch between terminal block and pcb it is necessary to interrupt the terminal row by poles higher than 30

Die Polzahl sollte maximal 30 betragen damit das Rastermaß von PCB und Leiterplattenklemme noch übereinstimmen

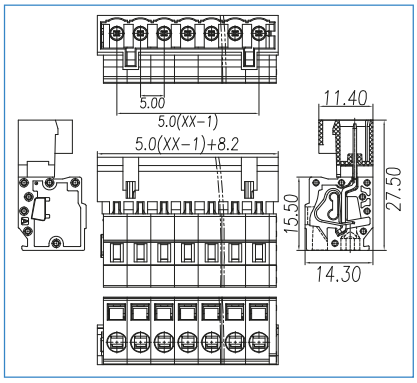

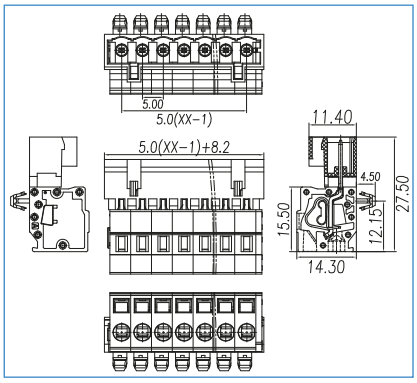

COME ORDINARE
HOW TO ORDER / BESTELLNUMMER

Series	n. poles	pitch	version	color	custom

PASSO / PITCH / RASTERMAß

2 POLI	CFP302-5-S	CFP302-5-SP
3 POLI	CFP303-5-S	CFP303-5-SP
	CFP304-5-S	CFP304-5-SP
	CFP305-5-S	CFP305-5-SP
	CFP306-5-S	CFP306-5-SP
	CFP307-5-S	CFP307-5-SP
	CFP308-5-S	CFP308-5-SP
	CFP309-5-S	CFP309-5-SP
	CFP310-5-S	CFP310-5-SP
	CFP311-5-S	CFP311-5-SP
	CFP312-5-S	CFP312-5-SP
	CFP313-5-S	CFP313-5-SP
	CFP314-5-S	CFP314-5-SP
	CFP315-5-S	CFP315-5-SP
	CFP316-5-S	CFP316-5-SP
	CFP317-5-S	CFP317-5-SP
	CFP318-5-S	CFP318-5-SP
	CFP319-5-S	CFP319-5-SP
	CFP320-5-S	CFP320-5-SP
	CFP321-5-S	CFP321-5-SP
	CFP322-5-S	CFP322-5-SP
	CFP323-5-S	CFP323-5-SP
24 POLI	CFP324-5-S	CFP324-5-SP

CFP3-5-SF	CFP3-5.08	CFP3-5.08-P
5 mm	5,08 mm	5,08 mm
2÷24	2÷24	2÷24
PA66, UL 94V0	PA66, UL 94V0	PA66, UL 94V0
250V	250V	250V
16A	16A	16A
2,5 mm2 28÷12AWG	2,5 mm2 28÷12AWG	2,5 mm2 28÷12AWG
-40°C + 105°C	-40°C + 105°C	-40°C + 105°C
8 mm	8 mm	8 mm
15A-300V	15A-300V	15A-300V
LGY (light grey)	OG (orange)	OG (orange)

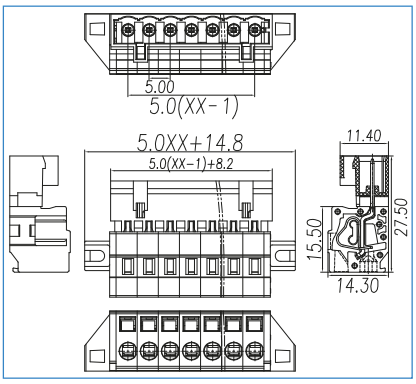

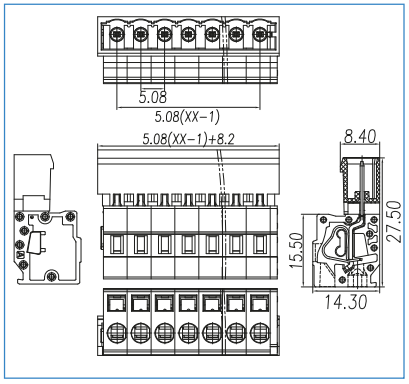

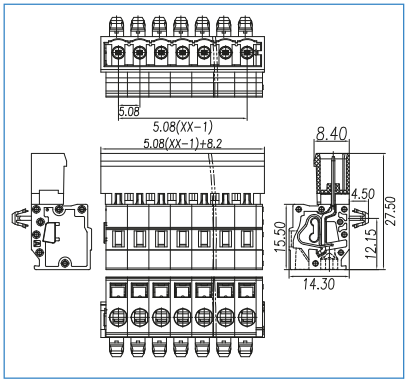

CFP302-5-SF	CFP302-5.08	CFP302-5.08-P
CFP303-5-SF	CFP303-5.08	CFP303-5.08-P
CFP304-5-SF	CFP304-5.08	CFP304-5.08-P
CFP305-5-SF	CFP305-5.08	CFP305-5.08-P
CFP306-5-SF	CFP306-5.08	CFP306-5.08-P
CFP307-5-SF	CFP307-5.08	CFP307-5.08-P
CFP308-5-SF	CFP308-5.08	CFP308-5.08-P
CFP309-5-SF	CFP309-5.08	CFP309-5.08-P
CFP310-5-SF	CFP310-5.08	CFP310-5.08-P
CFP311-5-SF	CFP311-5.08	CFP311-5.08-P
CFP312-5-SF	CFP312-5.08	CFP312-5.08-P
CFP313-5-SF	CFP313-5.08	CFP313-5.08-P
CFP314-5-SF	CFP314-5.08	CFP314-5.08-P
CFP315-5-SF	CFP315-5.08	CFP315-5.08-P
CFP316-5-SF	CFP316-5.08	CFP316-5.08-P
CFP317-5-SF	CFP317-5.08	CFP317-5.08-P
CFP318-5-SF	CFP318-5.08	CFP318-5.08-P
CFP319-5-SF	CFP319-5.08	CFP319-5.08-P
CFP320-5-SF	CFP320-5.08	CFP320-5.08-P
CFP321-5-SF	CFP321-5.08	CFP321-5.08-P
CFP322-5-SF	CFP322-5.08	CFP322-5.08-P
CFP323-5-SF	CFP323-5.08	CFP323-5.08-P
CFP324-5-SF	CFP324-5.08	CFP324-5.08-P

euro-block

SERIE/PRODUCT SERIES	CFP3-5.08-F	CFP3-5.08-S
Passo / Pitch(mm)/ Rastermaß	5,08 mm	5,08 mm
Poli monoblocco/single mold poles/Polzahl	2÷24	2÷24
Vite / Screw / Schraube		
Corpo isolante / Housing / Gehäuse	PA66, UL 94V0	PA66, UL 94V0
Tensione nominale/Rated Voltage/Nennspannung	250V	250V
Corrente Nominale/Rated Current/Nennstrom	16A	16A
Sezione Nominale/Wire section /Nennquerschnitt	2,5 mm2 28÷12 AWG	2,5 mm2 28÷12 AWG
Temperatura /Temperature /Temperatur	-40°C + 105°C	-40°C + 105°C
Coppia di torsione /Torque /Anzugsdrehmoment		
Lunghezza spellatura/Stripping lenght/Abisolierlänge	8 mm	8 mm
VDE		
UL - cUL (file n.E34235)	15A-300V	15A-300V
*Colore standard/ Standard colour/ Standardfarbe	OG (orange)	OG (orange)
Colori a richiesta/Colours on request/Farben auf Anfrage		

*= da non specificare sul codice di ordinazione
Do not specify on ordering code
Muss im Bestellcode nicht angegeben werden

Per evitare sbalzi tra i morsetti ed i fori sul c.s. bisogna prevedere una interruzione quando il n. di poli è superiore a 30.

To avoid loss of pitch between terminal block and pcb it is necessary to interrupt the terminal row by poles higher than 30

Die Polzahl sollte maximal 30 betragen damit das Rastermaß von PCB und Leiterplattenklemme noch übereinstimmen

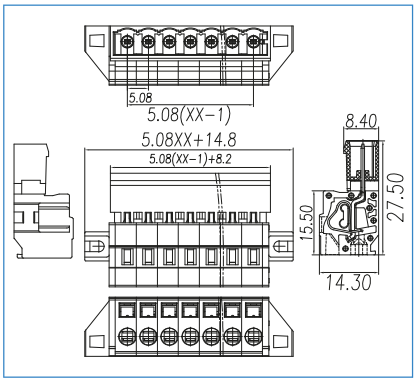

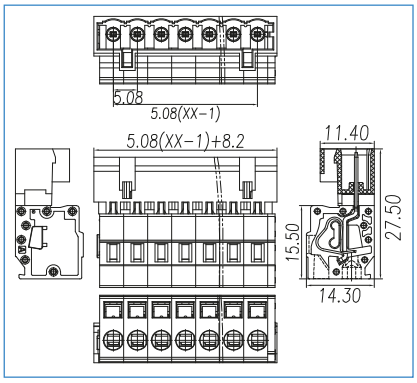

COME ORDINARE
HOW TO ORDER / BESTELLNUMMER

Series	n. poles	pitch	version	color	custom

PASSO / PITCH / RASTERMAß

	CFP3-5.08-F	CFP3-5.08-S
2 POLI	CFP302-5.08-F	CFP302-5.08-S
3 POLI	CFP303-5.08-F	CFP303-5.08-S
	CFP304-5.08-F	CFP304-5.08-S
	CFP305-5.08-F	CFP305-5.08-S
	CFP306-5.08-F	CFP306-5.08-S
	CFP307-5.08-F	CFP307-5.08-S
	CFP308-5.08-F	CFP308-5.08-S
	CFP309-5.08-F	CFP309-5.08-S
	CFP310-5.08-F	CFP310-5.08-S
	CFP311-5.08-F	CFP311-5.08-S
	CFP312-5.08-F	CFP312-5.08-S
	CFP313-5.08-F	CFP313-5.08-S
	CFP314-5.08-F	CFP314-5.08-S
	CFP315-5.08-F	CFP315-5.08-S
	CFP316-5.08-F	CFP316-5.08-S
	CFP317-5.08-F	CFP317-5.08-S
	CFP318-5.08-F	CFP318-5.08-S
	CFP319-5.08-F	CFP319-5.08-S
	CFP320-5.08-F	CFP320-5.08-S
	CFP321-5.08-F	CFP321-5.08-S
	CFP322-5.08-F	CFP322-5.08-S
	CFP323-5.08-F	CFP323-5.08-S
24 POLI	CFP324-5.08-F	CFP324-5.08-S

CFP3-5.08-SP	CFP3-5.08-SF	CFP4-7.5
5,08 mm	5,08 mm	7,5 mm
2÷24	2÷24	2÷24
PA66, UL 94V0	PA66, UL 94V0	PA66, UL 94V0
250V	250V	250V
16A	16A	16A
2,5 mm2 28÷12AWG	2,5 mm2 28÷12AWG	2,5 mm2 28÷12AWG
-40°C + 105°C	-40°C + 105°C	-40°C + 105°C
8 mm	8 mm	8 mm
15A-300V	15A-300V	15A-300V
OG (orange)	OG (orange)	GY (grey)

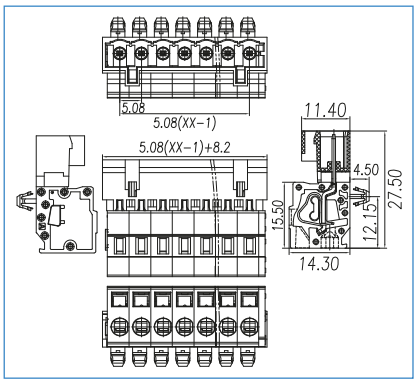

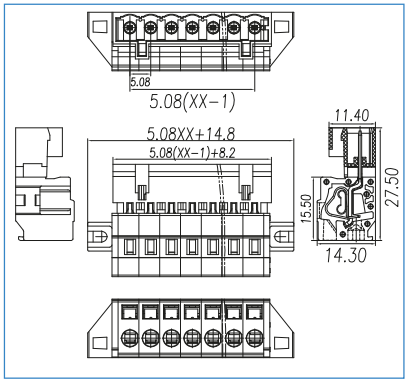

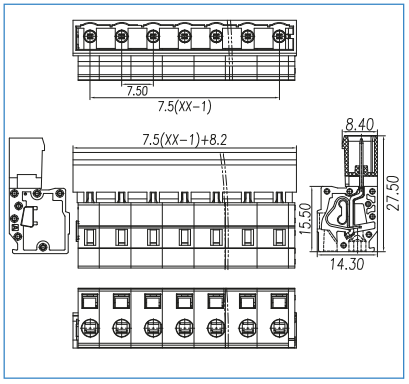

CFP302-5.08-SP	CFP302-5.08-SF	CFP402-7.5
CFP303-5.08-SP	CFP303-5.08-SF	CFP403-7.5
CFP304-5.08-SP	CFP304-5.08-SF	CFP404-7.5
CFP305-5.08-SP	CFP305-5.08-SF	CFP405-7.5
CFP306-5.08-SP	CFP306-5.08-SF	CFP406-7.5
CFP307-5.08-SP	CFP307-5.08-SF	CFP407-7.5
CFP308-5.08-SP	CFP308-5.08-SF	CFP408-7.5
CFP309-5.08-SP	CFP309-5.08-SF	CFP409-7.5
CFP310-5.08-SP	CFP310-5.08-SF	CFP410-7.5
CFP311-5.08-SP	CFP311-5.08-SF	CFP411-7.5
CFP312-5.08-SP	CFP312-5.08-SF	CFP412-7.5
CFP313-5.08-SP	CFP313-5.08-SF	CFP413-7.5
CFP314-5.08-SP	CFP314-5.08-SF	CFP414-7.5
CFP315-5.08-SP	CFP315-5.08-SF	CFP415-7.5
CFP316-5.08-SP	CFP316-5.08-SF	CFP416-7.5
CFP317-5.08-SP	CFP317-5.08-SF	CFP417-7.5
CFP318-5.08-SP	CFP318-5.08-SF	CFP418-7.5
CFP319-5.08-SP	CFP319-5.08-SF	CFP419-7.5
CFP320-5.08-SP	CFP320-5.08-SF	CFP420-7.5
CFP321-5.08-SP	CFP321-5.08-SF	CFP421-7.5
CFP322-5.08-SP	CFP322-5.08-SF	CFP422-7.5
CFP323-5.08-SP	CFP323-5.08-SF	CFP423-7.5
CFP324-5.08-SP	CFP324-5.08-SF	CFP424-7.5

euro-block

SERIE/PRODUCT SERIES	CFP4-7.5-P	CFP4-7.5-F
Passo / Pitch(mm)/ Rastermaß	7,5 mm	7,5 mm
Poli monoblocco/single mold poles/Polzahl	2÷24	2÷24
Vite / Screw / Schraube		
Corpo isolante / Housing / Gehäuse	PA66, UL 94V0	PA66, UL 94V0
Tensione nominale/Rated Voltage/Nennspannung	250V	250V
Corrente Nominale/Rated Current/Nennstrom	16A	16A
Sezione Nominale/Wire section /Nennquerschnitt	2,5 mm2 28÷12 AWG	2,5 mm2 28÷12 AWG
Temperatura /Temperature /Temperatur	-40°C + 105°C	-40°C + 105°C
Coppia di torsione /Torque /Anzugsdrehmoment		
Lunghezza spellatura/Stripping lenght/Abisolierlänge	8 mm	8 mm
VDE		
UL - cUL (file n.E34235)	15A-300V	15A-300V
*Colore standard/ Standard colour/ Standardfarbe	GY (grey)	GY (grey)
Colori a richiesta/Colours on request/Farben auf Anfrage		

*= da non specificare sul codice di ordinazione
Do not specify on ordering code
Muss im Bestellcode nicht angegeben werden

Per evitare sbalzi tra i morsetti ed i fori sul c.s. bisogna prevedere una interruzione quando il n. di poli è superiore a 30.

To avoid loss of pitch between terminal block and pcb it is necessary to interrupt the terminal row by poles higher than 30

Die Polzahl sollte maximal 30 betragen damit das Rastermaß von PCB und Leiterplattenklemme noch übereinstimmen

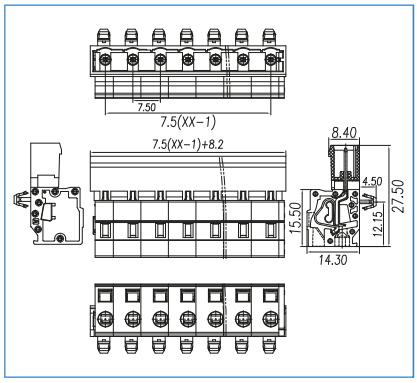

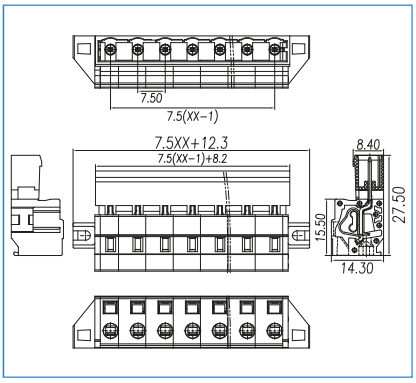

COME ORDINARE
HOW TO ORDER / BESTELLNUMMER

Series	n. poles	pitch	version	color	custom

PASSO / PITCH / RASTERMAß

2 POLI	CFP402-7.5-P	CFP402-7.5-F
3 POLI	CFP403-7.5-P	CFP403-7.5-F
	CFP404-7.5-P	CFP404-7.5-F
	CFP405-7.5-P	CFP405-7.5-F
	CFP406-7.5-P	CFP406-7.5-F
	CFP407-7.5-P	CFP407-7.5-F
	CFP408-7.5-P	CFP408-7.5-F
	CFP409-7.5-P	CFP409-7.5-F
	CFP410-7.5-P	CFP410-7.5-F
	CFP411-7.5-P	CFP411-7.5-F
	CFP412-7.5-P	CFP412-7.5-F
	CFP413-7.5-P	CFP413-7.5-F
	CFP414-7.5-P	CFP414-7.5-F
	CFP415-7.5-P	CFP415-7.5-F
	CFP416-7.5-P	CFP416-7.5-F
	CFP417-7.5-P	CFP417-7.5-F
	CFP418-7.5-P	CFP418-7.5-F
	CFP419-7.5-P	CFP419-7.5-F
	CFP420-7.5-P	CFP420-7.5-F
	CFP421-7.5-P	CFP421-7.5-F
	CFP422-7.5-P	CFP422-7.5-F
	CFP423-7.5-P	CFP423-7.5-F
24 POLI	CFP424-7.5-P	CFP424-7.5-F

CFP4-7.5-S	CFP4-7.5-SP	CFP4-7.5-SF
7,5 mm	7,5 mm	7,5 mm
2÷24	2÷24	2÷24
PA66, UL 94V0	PA66, UL 94V0	PA66, UL 94V0
250V	250V	250V
16A	16A	16A
2,5 mm2 28÷12AWG	2,5 mm2 28÷12AWG	2,5 mm2 28÷12AWG
-40°C + 105°C	-40°C + 105°C	-40°C + 105°C
8 mm	8 mm	8 mm
15A-300V	15A-300V	15A-300V
LGY (light grey)	LGY (light grey)	LGY (light grey)

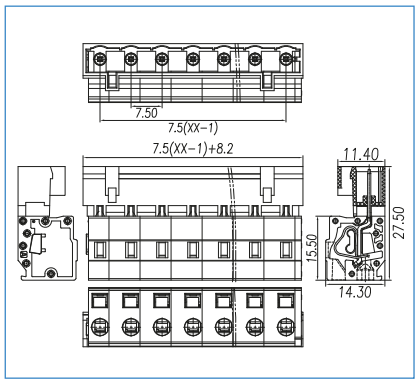

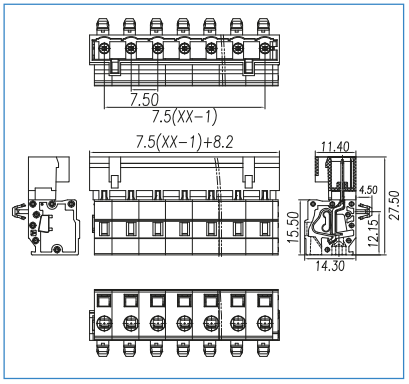

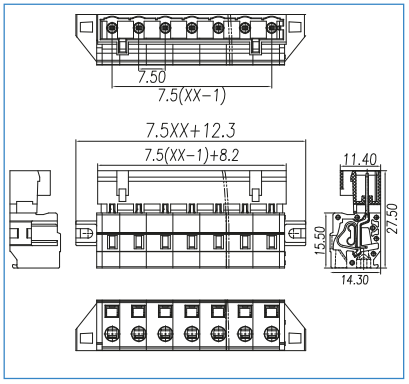

CFP402-7.5-S	CFP402-7.5-SP	CFP402-7.5-SF
CFP403-7.5-S	CFP403-7.5-SP	CFP403-7.5-SF
CFP404-7.5-S	CFP404-7.5-SP	CFP404-7.5-SF
CFP405-7.5-S	CFP405-7.5-SP	CFP405-7.5-SF
CFP406-7.5-S	CFP406-7.5-SP	CFP406-7.5-SF
CFP407-7.5-S	CFP407-7.5-SP	CFP407-7.5-SF
CFP408-7.5-S	CFP408-7.5-SP	CFP408-7.5-SF
CFP409-7.5-S	CFP409-7.5-SP	CFP409-7.5-SF
CFP410-7.5-S	CFP410-7.5-SP	CFP410-7.5-SF
CFP411-7.5-S	CFP411-7.5-SP	CFP411-7.5-SF
CFP412-7.5-S	CFP412-7.5-SP	CFP412-7.5-SF
CFP413-7.5-S	CFP413-7.5-SP	CFP413-7.5-SF
CFP414-7.5-S	CFP414-7.5-SP	CFP414-7.5-SF
CFP415-7.5-S	CFP415-7.5-SP	CFP415-7.5-SF
CFP416-7.5-S	CFP416-7.5-SP	CFP416-7.5-SF
CFP417-7.5-S	CFP417-7.5-SP	CFP417-7.5-SF
CFP418-7.5-S	CFP418-7.5-SP	CFP418-7.5-SF
CFP419-7.5-S	CFP419-7.5-SP	CFP419-7.5-SF
CFP420-7.5-S	CFP420-7.5-SP	CFP420-7.5-SF
CFP421-7.5-S	CFP421-7.5-SP	CFP421-7.5-SF
CFP422-7.5-S	CFP422-7.5-SP	CFP422-7.5-SF
CFP423-7.5-S	CFP423-7.5-SP	CFP423-7.5-SF
CFP424-7.5-S	CFP424-7.5-SP	CFP424-7.5-SF

euro-block

SERIE/PRODUCT SERIES	CFP4-7.62	CFP4-7.62-P
Passo / Pitch(mm)/ Rastermaß	7,62 mm	7,62 mm
Poli monoblocco/single mold poles/Polzahl	2÷24	2÷24
Vite / Screw / Schraube		
Corpo isolante / Housing / Gehäuse	PA66, UL 94V0	PA66, UL 94V0
Tensione nominale/Rated Voltage/Nennspannung	250V	250V
Corrente Nominale/Rated Current/Nennstrom	16A	16A
Sezione Nominale/Wire section /Nennquerschnitt	2,5 mm2 28÷12 AWG	2,5 mm2 28÷12 AWG
Temperatura /Temperature /Temperatur	-40°C + 105°C	-40°C + 105°C
Coppia di torsione /Torque /Anzugsdrehmoment		
Lunghezza spellatura/Stripping lenght/Abisolierlänge	8 mm	8 mm
VDE		
UL - cUL (file n.E34235)	15A-300V	15A-300V
*Colore standard/ Standard colour/ Standardfarbe	OG (orange)	OG (orange)
Colori a richiesta/Colours on request/Farben auf Anfrage		

*= da non specificare sul codice di ordinazione
Do not specify on ordering code
Muss im Bestellcode nicht angegeben werden

Per evitare sbalzi tra i morsetti ed i fori sul c.s. bisogna prevedere una interruzione quando il n. di poli è superiore a 30.

To avoid loss of pitch between terminal block and pcb it is necessary to interrupt the terminal row by poles higher than 30

Die Polzahl sollte maximal 30 betragen damit das Rastermaß von PCB und Leiterplattenklemme noch übereinstimmen

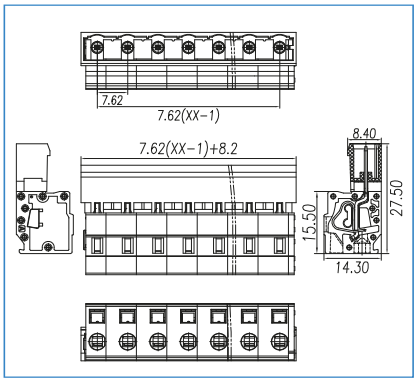

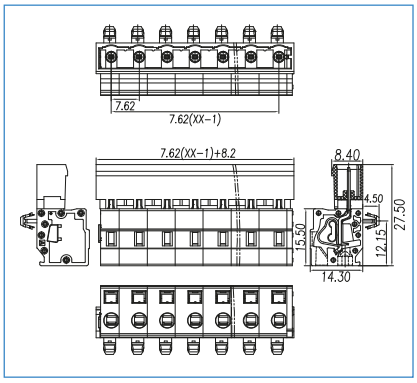

COME ORDINARE
HOW TO ORDER / BESTELLNUMMER

Series	n. poles	pitch	version	color	custom

PASSO / PITCH / RASTERMAß

2 POLI	CFP402-7.62	CFP402-7.62-P
3 POLI	CFP403-7.62	CFP403-7.62-P
	CFP404-7.62	CFP404-7.62-P
	CFP405-7.62	CFP405-7.62-P
	CFP406-7.62	CFP406-7.62-P
	CFP407-7.62	CFP407-7.62-P
	CFP408-7.62	CFP408-7.62-P
	CFP409-7.62	CFP409-7.62-P
	CFP410-7.62	CFP410-7.62-P
	CFP411-7.62	CFP411-7.62-P
	CFP412-7.62	CFP412-7.62-P
	CFP413-7.62	CFP413-7.62-P
	CFP414-7.62	CFP414-7.62-P
	CFP415-7.62	CFP415-7.62-P
	CFP416-7.62	CFP416-7.62-P
	CFP417-7.62	CFP417-7.62-P
	CFP418-7.62	CFP418-7.62-P
	CFP419-7.62	CFP419-7.62-P
	CFP420-7.62	CFP420-7.62-P
	CFP421-7.62	CFP421-7.62-P
	CFP422-7.62	CFP422-7.62-P
	CFP423-7.62	CFP423-7.62-P
24 POLI	CFP424-7.62	CFP424-7.62-P

CFP4-7.62-F

7,62 mm
2÷24
PA66, UL 94V0
250V
16A
2,5 mm2 28÷12AWG
-40°C + 105°C
8 mm
15A-300V
OG (orange)

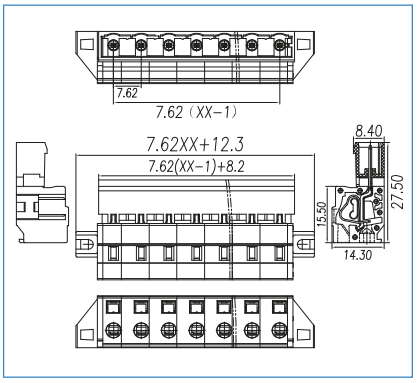

CFP4-7.62-S

7,62 mm
2÷24
PA66, UL 94V0
250V
16A
2,5 mm2 28÷12AWG
-40°C + 105°C
8 mm
15A-300V
OG (orange)

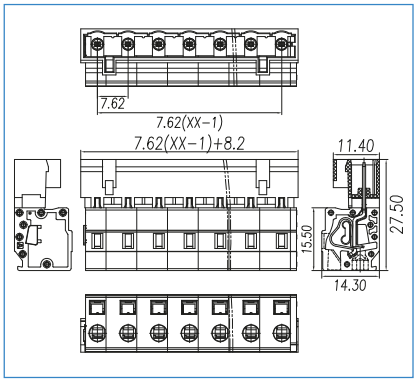

CFP4-7.62-SP

7,62 mm
2÷24
PA66, UL 94V0
250V
16A
2,5 mm2 28÷12AWG
-40°C + 105°C
8 mm
15A-300V
OG (orange)

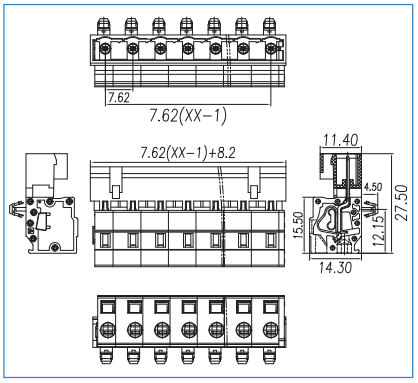

CFP402-7.62-F	CFP402-7.62-S	CFP402-7.62-SP
CFP403-7.62-F	CFP403-7.62-S	CFP403-7.62-SP
CFP404-7.62-F	CFP404-7.62-S	CFP404-7.62-SP
CFP405-7.62-F	CFP405-7.62-S	CFP405-7.62-SP
CFP406-7.62-F	CFP406-7.62-S	CFP406-7.62-SP
CFP407-7.62-F	CFP407-7.62-S	CFP407-7.62-SP
CFP408-7.62-F	CFP408-7.62-S	CFP408-7.62-SP
CFP409-7.62-F	CFP409-7.62-S	CFP409-7.62-SP
CFP410-7.62-F	CFP410-7.62-S	CFP410-7.62-SP
CFP411-7.62-F	CFP411-7.62-S	CFP411-7.62-SP
CFP412-7.62-F	CFP412-7.62-S	CFP412-7.62-SP
CFP413-7.62-F	CFP413-7.62-S	CFP413-7.62-SP
CFP414-7.62-F	CFP414-7.62-S	CFP414-7.62-SP
CFP415-7.62-F	CFP415-7.62-S	CFP415-7.62-SP
CFP416-7.62-F	CFP416-7.62-S	CFP416-7.62-SP
CFP417-7.62-F	CFP417-7.62-S	CFP417-7.62-SP
CFP418-7.62-F	CFP418-7.62-S	CFP418-7.62-SP
CFP419-7.62-F	CFP419-7.62-S	CFP419-7.62-SP
CFP420-7.62-F	CFP420-7.62-S	CFP420-7.62-SP
CFP421-7.62-F	CFP421-7.62-S	CFP421-7.62-SP
CFP422-7.62-F	CFP422-7.62-S	CFP422-7.62-SP
CFP423-7.62-F	CFP423-7.62-S	CFP423-7.62-SP
CFP424-7.62-F	CFP424-7.62-S	CFP424-7.62-SP

euro-block

CFP4-7.62-SF

SERIE/PRODUCT SERIES	
Passo / Pitch(mm)/ Rastermaß	7,62 mm
Poli monoblocco/single mold poles/Polzahl	2÷24
Vite / Screw / Schraube	
Corpo isolante / Housing / Gehäuse	PA66, UL 94V0
Tensione nominale/Rated Voltage/Nennspannung	250V
Corrente Nominale/Rated Current/Nennstrom	16A
Sezione Nominale/Wire section /Nennquerschnitt	2,5 mm2 28÷12AWG
Temperatura /Temperature /Temperatur	-40°C + 105°C
Coppia di torsione /Torque /Anzugsdrehmoment	
Lunghezza spellatura/Stripping lenght/Abisolierlänge	8 mm
VDE	
UL - cUL (file n.E34235)	15A-300V
*Colore standard/ Standard colour/ Standardfarbe	OG (orange)
Colori a richiesta/Colours on request/Farben auf Anfrage	

*= da non specificare sul codice di ordinazione
Do not specify on ordering code
Muss im Bestellcode nicht angegeben werden

Per evitare sbalzi tra i morsetti ed i fori sul c.s. bisogna prevedere una interruzione quando il n. di poli è superiore a 30.

To avoid loss of pitch between terminal block and pcb it is necessary to interrupt the terminal row by poles higher than 30

Die Polzahl sollte maximal 30 betragen damit das Rastermaß von PCB und Leiterplattenklemme noch übereinstimmen

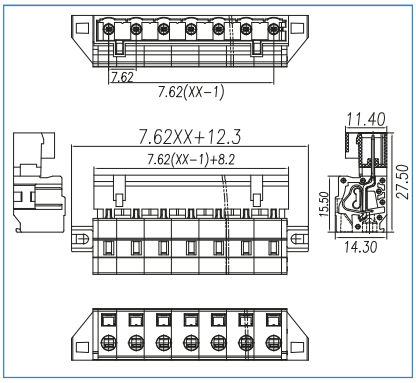

COME ORDINARE
HOW TO ORDER / BESTELLNUMMER

Series	n. poles	pitch	version	color	custom

PASSO / PITCH / RASTERMAß

2 POLI	CFP402-7.62-SF
3 POLI	CFP403-7.62-SF
	CFP404-7.62-SF
	CFP405-7.62-SF
	CFP406-7.62-SF
	CFP407-7.62-SF
	CFP408-7.62-SF
	CFP409-7.62-SF
	CFP410-7.62-SF
	CFP411-7.62-SF
	CFP412-7.62-SF
	CFP413-7.62-SF
	CFP414-7.62-SF
	CFP415-7.62-SF
	CFP416-7.62-SF
	CFP417-7.62-SF
	CFP418-7.62-SF
	CFP419-7.62-SF
	CFP420-7.62-SF
	CFP421-7.62-SF
	CFP422-7.62-SF
	CFP423-7.62-SF
24 POLI	CFP424-7.62-SF

Supporti per c.s. da guida din

Din rail supports for pcb

euro-block

CODICE D'ORDINE *ORDERING CODE*	**EX72-xxxx-BK**	**EX72-xxxx**
Descrizione *Description*	Barra supporto scheda/pcb tray	Barra supporto scheda/pcb tray
Altezza *Height*	72 mm	72 mm
Larghezza *Width*	16 mm ÷ 2000 mm	16 mm ÷ 2000 mm
Colore *Colour*	Nero/Black - RAL 9005	Verde/Green - RAL6017
Disegno tecnico *Technical datasheet*	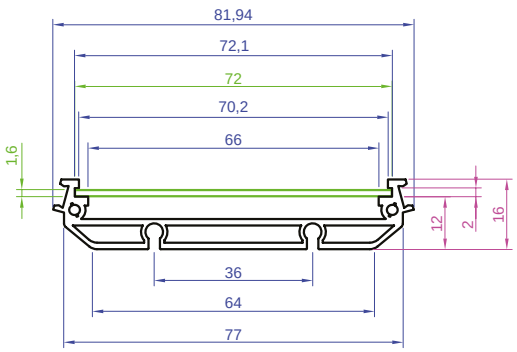	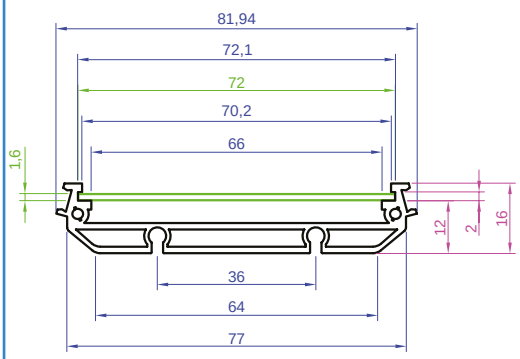
Lettura codice *Code description*	xxxx = lunghezza supporto / *Lenght of tray* xxxx = da 0016 a 2000 / *from 0016 to 2000*	xxxx = lunghezza supporto / *Lenght of tray* xxxx = da 0016 a 2000 / *from 0016 to 2000*

euro-block

CODICE D'ORDINE *ORDERING CODE*	EX107-xxxx-BK	EX107-xxxx
Descrizione *Description*	Barra supporto scheda/pcb tray	Barra supporto scheda/pcb tray
Altezza *Height*	107 mm	107 mm
Larghezza *Width*	16 mm ÷ 2000 mm	16 mm ÷ 2000 mm
Colore *Colour*	Nero/Black - RAL 9005	Verde/Green - RAL6017
Disegno tecnico *Technical datasheet*	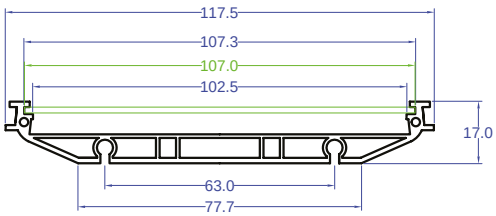	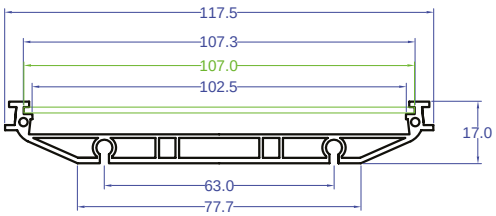
Lettura codice *Code description*	xxxx = lunghezza supporto / *Lenght of tray* xxxx = da 0016 a 2000 / *from 0016 to 2000*	xxxx = lunghezza supporto / *Lenght of tray* xxxx = da 0016 a 2000 / *from 0016 to 2000*

euro-block

CODICE D'ORDINE *ORDERING CODE*	**EX72-DH-BK**	**EX72-DH**
Descrizione *Description*	Gancio barra DIN/DIN rail hook	Gancio barra DIN/DIN rail hook
Altezza *Height*	72 mm	72 mm
Larghezza *Width*	–	–
Colore *Colour*	Nero/Black - RAL 9005	Verde/Green - RAL6017
Disegno tecnico *Technical datasheet*	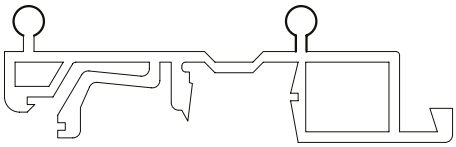	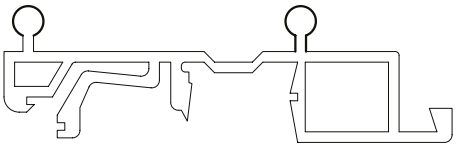

euro-block

CODICE D'ORDINE *ORDERING CODE*	EX107-DH-BK	EX107-DH
Descrizione *Description*	Barra supporto scheda/pcb tray	Barra supporto scheda/pcb tray
Altezza *Height*	107 mm	107 mm
Larghezza *Width*	–	–
Colore *Colour*	Nero/Black - RAL 9005	Verde/Green - RAL6017
Disegno tecnico *Technical datasheet*	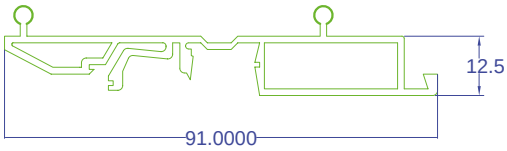	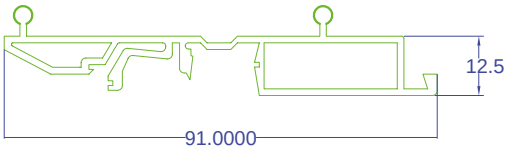

euro-block

CODICE D'ORDINE *ORDERING CODE*	**EX72-LC-BK**	**EX72-LC**
Descrizione *Description*	Chiusura laterale/End closure	Chiusura laterale/End closure
Altezza *Height*	72 mm	72 mm
Larghezza *Width*	–	–
Colore *Colour*	Nero/Black - RAL 9005	Verde/Green - RAL6017
Disegno tecnico *Technical datasheet*	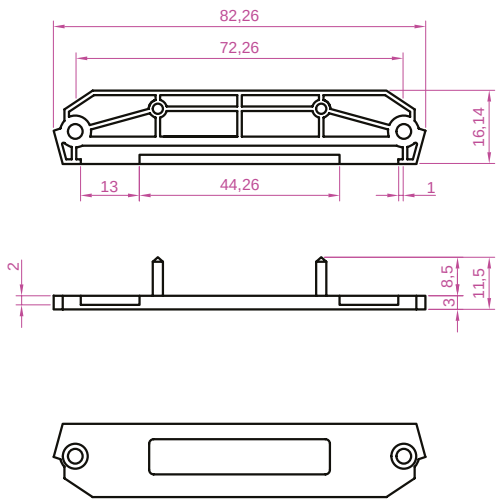	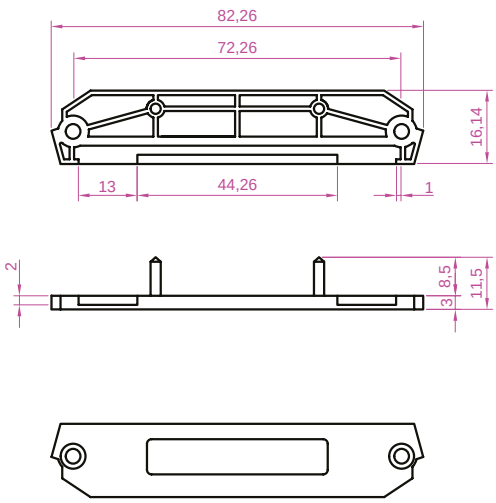

euro-block

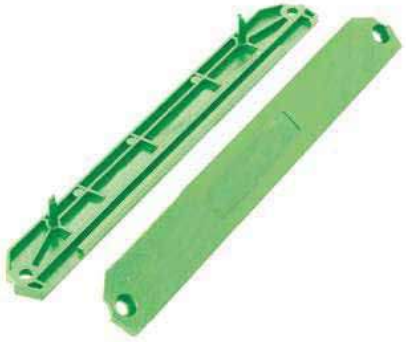

CODICE D'ORDINE *ORDERING CODE*	EX107-LC-BK	EX107-LC-BK
Descrizione *Description*	Chiusura laterale/End closure	Chiusura laterale/End closure
Altezza *Height*	107 mm	107 mm
Larghezza *Width*	–	–
Colore *Colour*	Nero/Black - RAL 9005	Verde/Green - RAL6017
Disegno tecnico *Technical datasheet*	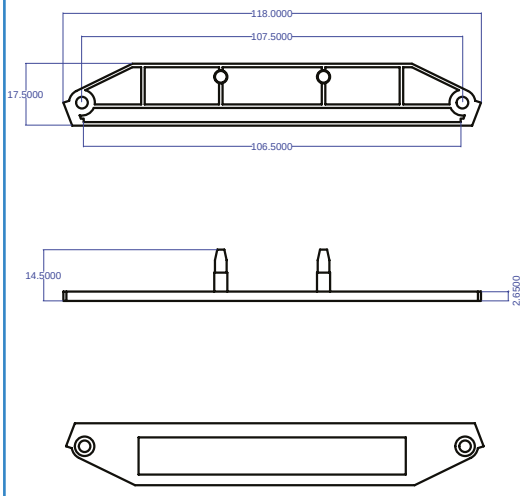	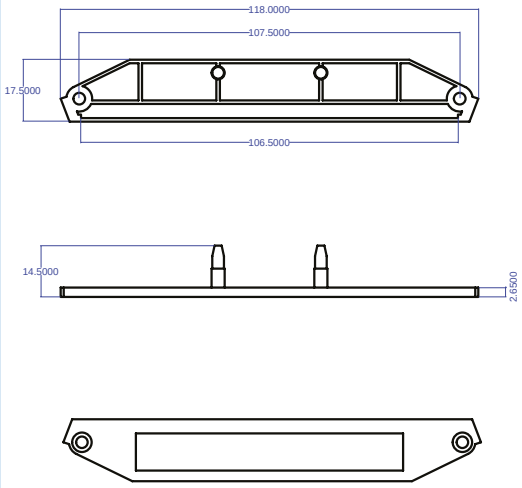

euro-block

CODICE D'ORDINE *ORDERING CODE*	EX72-xxxx-KIT-BK	EX72-xxxx-KIT
Descrizione *Description*	Kit su misura/Custom Kit	Kit su misura/Custom Kit
Altezza *Height*	72 mm	72 mm
Larghezza *Width*	Su misura/On demand	Su misura/On demand
Colore *Colour*	Nero/Black - RAL 9005	Verde/Green - RAL6017
Lettura codice *Code description*	xxxx = lunghezza supporto / *Lenght of tray* xxxx = da 0016 a 2000 / *from 0016 to 2000*	xxxx = lunghezza supporto / *Lenght of tray* xxxx = da 0016 a 2000 / *from 0016 to 2000*

CODICE D'ORDINE *ORDERING CODE*	EX107-xxxx-KIT-BK	EX107-xxxx-KIT
Descrizione *Description*	Kit su misura/Custom Kit	Kit su misura/Custom Kit
Altezza *Height*	107 mm	107 mm
Larghezza *Width*	Su misura/On demand	Su misura/On demand
Colore *Colour*	Nero/Black - RAL 9005	Verde/Green - RAL6017
Lettura codice *Code description*	xxxx = lunghezza supporto / *Lenght of tray* xxxx = da 0016 a 2000 / *from 0016 to 2000*	xxxx = lunghezza supporto / *Lenght of tray* xxxx = da 0016 a 2000 / *from 0016 to 2000*

euro-block

CODICE D'ORDINE *ORDERING CODE*	**BOX225**	**BOX45**
Descrizione *Description*	Box 22,5 mm	Box 45 mm
Dimensioni *Dimensions*	100x80x22,5 mm	100x80x45 mm
Colore *Colour*	Verde/Green - RAL6017	Verde/Green - RAL6017
Disegno tecnico *Technical datasheet*	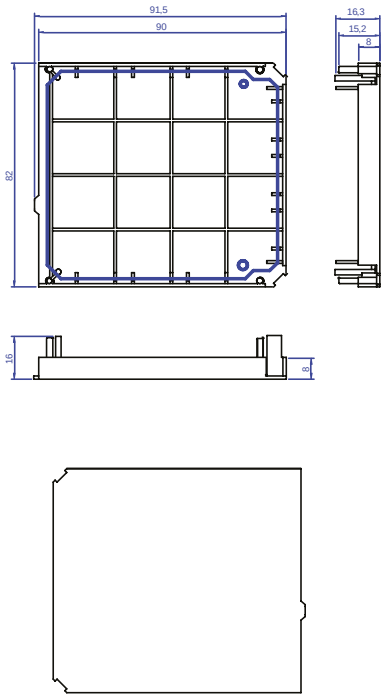	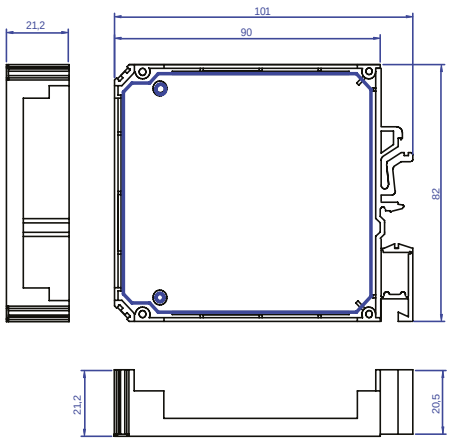

euro-block

CODICE D'ORDINE *ORDERING CODE*	**CC6017**	**OC2017**
Descrizione *Description*	Frontale chiuso/Closed cover	Frontale forato/Open cover
Dimensioni *Dimensions*	60x17 mm	20x17 mm
Colore *Colour*	Verde/Green - RAL6017	Verde/Green - RAL6017

Disegno tecnico
Technical datasheet

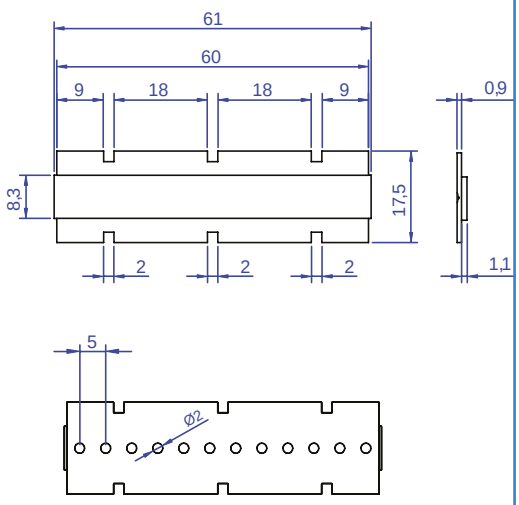

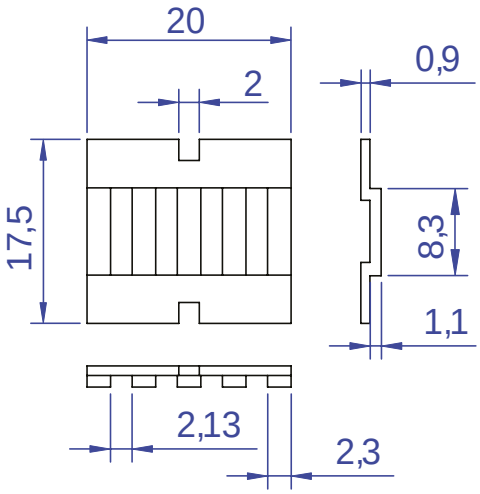

euro-block

INFORMAZIONE TECNICA
TECHNICAL INFORMATION

DIMENSIONE DEL C.S. PER LA SERIE BOX
PCB DIMENSION FOR BOX SERIES

Descrizione *Description*	–
Dimensioni *Dimensions*	–
Disegno tecnico *Technical datasheet*	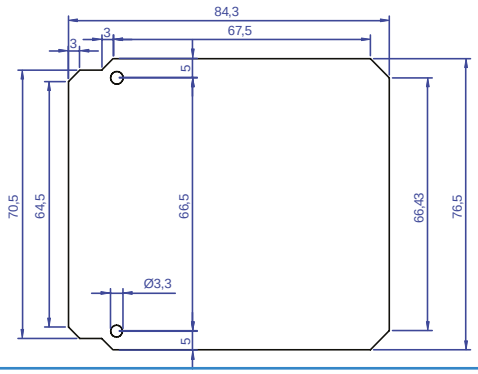

CODICE D'ORDINE
ORDERING CODE

EX-SC

Descrizione *Description*	Vite di fissaggio/Fixing screws

euro-block

Attention:
Text and photograph album filled in are extension of electronic copyright, piracy, reserved.

Eldeco Elettronica Srl

via Giordano Bruno, 83
10134 Torino
+39 011 380.40.68
info@eldeco.it

www.euro-block.it